

TFHC-K

台南總公司 台南市永康區三村一街220號
TEL : (06) 243-7397 FAX : (06) 243-6797

台中辦公室
TEL : (04) 2496-0759 FAX : (04) 2496-5240

台北辦公室
TEL : (02) 2695-4676 FAX : (02) 2695-7545

天福宏承密封有限公司

TFHC-K

SOG&H.T 天福宏承密封元件 第八版



油封

SOG&H.T

TFHC-K

天福宏承密封元件







SOG&H.T 天福宏承密封元件

TFHC-K

ISO 9001
ISO 14001
ISO 18001
IATF16949
OHSAS 18001
TOSHMS:2007
LRQA Certificate

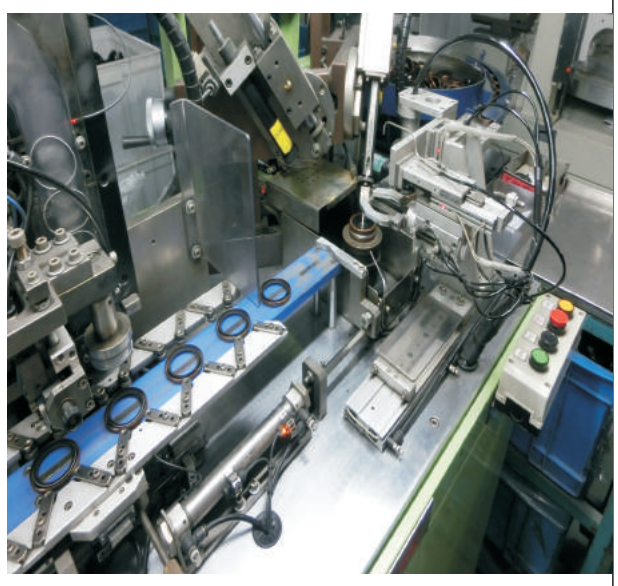



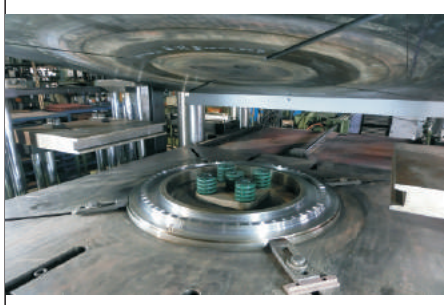







SOG&H.T 天福宏承密封元件





液壓缸專用油封



SOG&H.T 天福宏承密封元件



汽車工業 (Automotive Industry)

符合各項汽車材料規範，如DBL, FORD, GMW, VW2.8.1等汽車規範。

Our material meets all kinds of automotive specification, such as DBL, FORD, GWM, and VW 2.8.1 standards.



化工產業 (CPI)

提供符合耐化性非常好的橡膠材料。FFKM, AFLAS, ETP, FKM, EPDM

Offers outstanding resistance to aggressive media such as hot organic and inorganic acids, such as FFKM, AFLAS, ETP, and FKM.



石油與天然氣 (Oil & Gas)

提供可符合RGD H_2S 的產品，供鑽油井相關產業使用。

Provides material meets RGD requirement and standard H2S environment, especially for drilling industry.



消費性產品 (Consumer Product)

多樣性的產品選擇，如廚房用品、鍵盤、錶帶等消費品。

There are Various materials selection, like Kitchen Ware, Keyboard, and Watch Band.



航太工業 (Aerospace)

提供耐高低溫，且耐航空燃油的橡膠材料，如FVMQ, FKM等材料。

Offers High and Low temperature and aerospace fuel resistance rubber product, like FVMQ and FKM.





重工業制品 (Heavy-duty Industry)

用於挖土機、堆高機等產業。已被客戶廣泛使用於耐高壓油封及V型環等產品。

Already widely used in equipment for construction, our rubber mainly for Oil Seal, V-ring, and hydraulic rubber parts.



食品及飲料 (Food & Beverages)

提供符合食品FDA及各國飲用水WRAS, KTW, ACS,KIWA, NSF等飲用水認證。

Provides material certified by FDA, WARS, KTW, ACS, KIWA, and NSF for drinking water application.



鐵路系統 (Rail Transportation)

即將成為鐵路產業的全解決方案提供者，例如煞車系統與傳動系統。

A rail transportation total solution provider, including breaking system and transmission system.



制藥工業 (Pharma)

每一批矽膠材料都有通過USP Class VI。

Our silicone rubber for medical purpose with USP Class VI certified, and done ISO-10993 selected chapter for every batch.

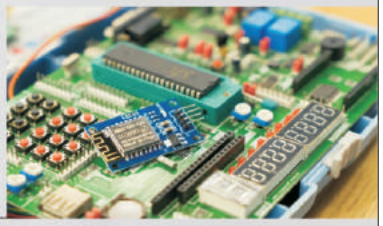

半導體產業 (Semiconductor)

提供FFKM, FKM, AFLAS, FVMQ橡膠材料生產Bonding Slit Valve Door及O型環應用在半導體產業。

We provides such as FFKM, FKM, AFLAS, and FVMQ rubber, widely used in semiconductor manufacturers.







全面品質管制

配合全廠品檢取樣輸送設備，品檢人員能夠落實每一批生產膠料，進行全面品檢再行出貨，提供穩定性極佳的膠料。

為符合客戶對品質的各項要求，從原物料到出貨的各項品質管制，滿足客戶對於高品質混練橡膠的各項要求。



Quality Control

To offer excellent rubber products and guarantee quality of every batch, our quality control department will follow from incoming to final process of quality control.

As mentioned quality process, we performs hardness (IRHD, Shore A), Rheometers, density, compound dispersion, physical property tests.







良弘提供





材 料 研 發

我們不斷地投資研發設備如：DSC、TMA、TGA、FTIR、GC/MAS and XRF(RoHS) 等分析儀器，並垂直整合上下游原物料，由專業研發團隊共同投入研發出更先進的橡膠材料，提供給每一位優質客戶。



長泓提供

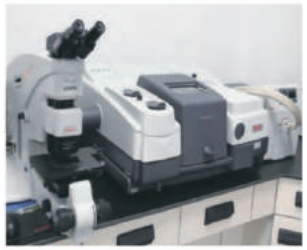



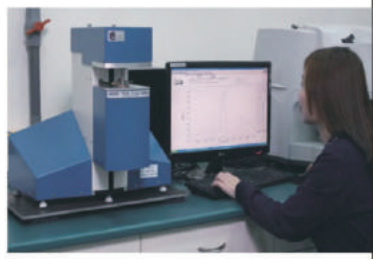

Material Development

To supply customer excellent and stable rubber, we already equip DSC, TMA, TGA, FTIR, GC/MAS, and XRF (RoHS) analytical Instruments. Our R&D department keeps increasing budget on the latest instruments. We develop advanced material with supply chain to our valued customer.





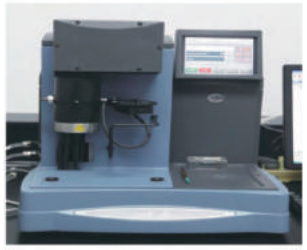







TAF 實　驗　室

我們擁有專業的實驗室並取得國際認證TAF(ISO 17025)證書，完整的測試設備並可以符合美國ASTM,歐洲ISO,日本JIS,德國DIN橡膠標準。具備公信力的實驗數據，幫助客戶更快速取得國際客戶對於橡膠的嚴格要求，提供客戶最值得信賴的各項技術資料。

長泓提供





TAF Laboratory

Testing Laboratory
1050

We have a professional TAF (ISO17025) certificated laboratory.

Our testing equipment conform to ASTM, ISO, JIS, and DIN rubber standards. Creditable testing data helps customer to stand strictly standard. Your request is our duty.











FKM預混膠生產線

由於極地氣候影響，全球對於橡膠的需求日漸嚴苛，透過上下游供應鍊的整合，由專業團隊針對國內外客戶對於FKM材料提供如渦輪增壓管，O型圈等產品，更進一步研發極低溫的FKM材料及全氟膠料，全面符合客戶需求，並能依客戶屬性獨立研發適合客戶製程的氟橡膠材料。





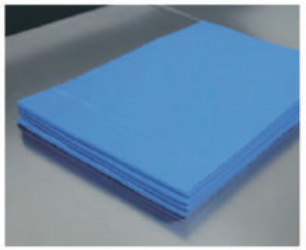

FKM Production-line

Upstream and downstream supply chain integration, Our team design FKM materials for application such as Turbo Charge Horse (TCH), O-ring, Oil-seals, boots...etc. We are working on ultra-low temperture FKM, and FFKM formulation to fulfill customer's requirements.







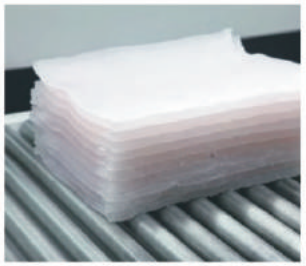



自動化劑量系統

針對汽車工業，航太客戶對於材料追溯能力的要求，我們投入了自動倉儲及劑量系統，大大提升作業流程及混煉膠品質穩定性，先進的ERP電腦系統及條碼系統，滿足客戶對於橡膠控管要求並能安心使用我們的混練膠。

長泓提供





Auto-dosing System

Trace ability plays an important role in automotive and aerospace industry. We invested auto-dosing system to simplify processing and improve quality tremendously. Advanced ERP and Barcode system, relieve customers' quality concern. Our quality is your safety.









序 言

台灣天福宏承密封有限公司爲油壓、空壓、旋轉密封件之專業密封件整合供應商

此文本主要介紹**TFHC-K**出品，**SOG&HT** 製造的骨架油封**O/X**型圈 **PU / PTFE / FFKM** 與橡膠客製化製品適泛用於汽/機車電動車軌道交通海事航天設備油/煉鋼重工/工程機械 **AI**/電子設備之密封應用

“品質至上、快速服務、唯新產品”是我們的服務方向
“貫徹服務、技術創新、永續經營”是我們的經營理念

我們以先進的生產技術，嚴格的品管制度完善的售後服務
來滿足國內外各產業的生產配套經銷維修客户群需求
志要爲每個客户夥伴們提供一流的密封技術，
作爲產業界可依賴的主供應商
優質的產品將產出於優質的工作環境，
我們對產品、員工、廠區的自主要求
我們符合**IATF-16949**品質認證要求的產品質量
我們符合**ISO-14000**環境管理系統標準的作業環境
我們符合**OHSAS-18000**職業安全衛生管理體系的廠區

本文本目錄內提供的型號規格及尺寸，可作爲分銷商銷售參考與直接使用終端客户的機械設計與實際安裝參考指南，我們陸續引進台灣及國外的高階工業密封產品與技術，尤其在非標準品，急件或產品取代，我們可以依客户樣品或圖面做加工，我們最大加工直徑可達**1500mm**，最大加工尺寸可達**4000mm**。

目錄內摘錄的型號規格及尺寸，是市場通用件我司所能生產提供的產品與規格，並不局限於目錄中的型號與尺寸，若有目錄中無刊登紀載的型號或尺寸，請直接和本公司業務人員聯絡我們將盡快爲您服務!

Preface

Taiwan TFHC-K Seal Co., Ltd. is an experienced supplier of integration sealing element for hydraulic, pneumatic and rotation machinery.

This catalog mainly introduces the SOG&HT brand oil seal, O / X ring, PU / PTFE / FFKM and rubber compound customized products distributed by TFHC-K. Our product is suitable for use in automobile / motorcycle, electric vehicle, rail transportation, marine equipment, aerial equipment, petrochemical, steelmaking, heavy industry, earth moving equipment, AI / Electronics equipment applications.
"Quality comes first. Fast service. Latest products" is our service direction "Performing services. Technical innovation. Sustainable business" is our business philosophy.

We use advanced production technology, strict quality control system and perfect after-sales service to meet the needs of production, distribution, and maintenance customer groups in various industries at home and abroad. Aiming to act as the main reliable supplier, we provide first-class sealing technology to every customer partner. High-quality products will be produced in a high-quality working environment, so

Our product quality meets IATF-16949 quality certification
Our operating environment complies with ISO-14000 environmental management system standards Our factory is in accordance with OHSAS-18000 occupational safety and health management system

The tool list in type and size printed in this catalog provide multifunction purpose for seals distributors, engineers of RD department and reference for installation of workshop. We continued in importing high-end industrial sealing products and technologies from Taiwan and abroad, especially for non-standard products, urgent requirement and replacement parts or products. We can process according to customer samples or drawings. Our maximum processing diameter can reach 1500mm and the maximum processing size can reach 4000mm.

The products and specifications that our company can produce and provide are not limited to the list in the catalog. If there are models or sizes not listed in the catalog, please contact our company directly. Contact us and we will serve you as soon as possible!

TFHC-K



鄧白氏獎





2019年，「鄧白氏中小企業菁英獎」 邁入第六屆
依據鄧白氏全球資料庫數據資料 ，從國內超過130萬家中小企業中，評選出最具出口競爭力的 **TOP 1000**家企業
恭喜 我司獲選為2019年，「鄧白氏中小企業菁英獎」**TOP 1000**菁英企業
衷心期盼您的蒞臨，一同迎接全球市場與創新思維，共創世界經濟永續

SOG&H.T 天福宏承密封元件

目　錄
Table of Contents

機械用骨架油封型號與特徵 ---------- 1
Type and Features of Oil Seal for Machinery

通用(標準)橡膠密封圈型號與特徵 ---------- 6
Type and Features of Standard Sealing Element

空壓油封特徵國際通用密封元件密封墊片 ---------- 8
Type and Features of Pneumatic Seal

密封件所使用的主要橡膠種類與特性 ---------- 10
Type and Features of Rubber for Oil Seals

骨架油封剖析意示圖 ---------- 12
Diagram of Metal Case Oil Seal

軸心轉速與油封材質適用表 ---------- 13
Shaft RPM, Surface Speed & Material

油封安裝部位的設計表 ---------- 14
Shaft Specification & Chamfer

油封安裝示意圖 ---------- 15
Instruction for Oil Seal Installation

發生泄漏檢查要點 ---------- 17
Cheaking Point for Leaking

技術資料 ---------- 18
Technical Information

骨架油封規格表 ---------- 19
Size list

DKB油封規格表 ---------- 88
DKB Type Size List

GA油封規格表 ---------- 90
GA Type Size List

VK 軸端封蓋 ---------- 96
VK Type End Cap Size List

TCN型油封規格表 ---------- 102
TCN Type Seal Size List

TCV型油封規格表 ---------- 104
TCV Type Seal Size List

VG型油封規格表 ---------- 106
VG Type Seal Size List

VC型油封規格表----------108
VC Type Seal Size List
VB型油封規格表----------113
VB Type Seal Size List
RB型油封規格表----------117
RB Type Seal Size List
9RB型油封規格表----------119
9RB Type Seal Size List
DC型油封規格表----------120
DC Type Seal Size List
DB型油封規格表----------125
DB Type Seal Size List
方向機油封規格表----------127
Power Steering Seal Size List
RYT-耐磨導向帶規格表----------130
RYT Type Wear Ring Size List
GSP-孔用格來圈規格表----------132
GSP Type Glyd-ring for Piston
GSR-軸用格來圈規格表----------135
GSR Type Glyd-ring for Rod
液壓單模塊活塞密封規格表----------138
Hydraulic Piston Seal Size List
气动用單模塊活塞密封規格表----------139
Pneumatic Piston Seal Size List
空壓用系列密封件規格表----------140
Pneumatic Seal Size List
VA型油封規格表----------147
VA Type Seal Size List
VS型油封規格表----------149
VS Type Seal Size List
華司油封804系列規格表----------151
Bonded Seal 804 Size List
華司油封800系列規格表----------153
Bonded Seal 800 Size List
車用油封規格表----------157
Automobile Oil Seal Size List
軸修護套規格表----------207
Shaft Sleeve Size List

機械用骨架油封型號與特徵

Type and Features of Oil Seal for Machinery

型號 Type	形狀 Shape	工作向性 Application (Purpose)	油封特徵 Features	標準材料 Standard Material	目録頁數 Index Page
TC	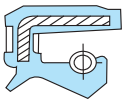	旋轉軸用 For Rotary Shaft	外圍橡膠之設計,凡用于各種材質之裝配環境，可適用軟質合金或具有塑性變型之塘孔，在塘孔表面受損時。它是密封用。雙唇口有彈簧，低磨擦系數，約耐0.03Mpa	NBR ACM SILICONE FPM	19–87頁
SC	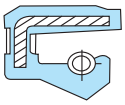	旋轉軸用 For Rotary Shaft	外圍橡膠之設計,凡用于各種材質之裝配環境，可適用軟質合金或具有塑性變型之塘孔，在塘孔表面受損時。它是密封用。單唇口有彈簧，低磨擦系數，約耐0.03Mpa		
TB	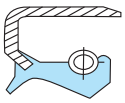	旋轉軸用 For Rotary Shaft	外圍鐵殼之設計，適用于鋼或鑄鐵材質之塘孔。它是密封用，雙唇口有彈簧，低磨擦系數，約耐0.03Mpa		
SB	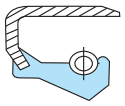	旋轉軸用 For Rotary Shaft	外圍鐵殼之設計，適用于鋼或鑄鐵材質之塘孔。它是密封用，單唇口有彈簧，低磨擦系數，約耐0.03Mpa		
TA	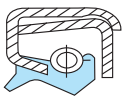	旋轉軸用 For Rotary Shaft	組合內殼之設計，用以加强油封之鋼性，特別適用于較大尺寸之油封，或須背面裝配者。它是密封用雙唇口有彈簧，低磨擦系數，約耐0.03Mpa		
SA	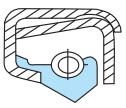	旋轉軸用 For Rotary Shaft	組合內殼之設計，用以加强油封之鋼性，特別適用于較大尺寸之油封，或須背面裝配者。它是密封用，單唇口有彈簧，低磨擦系數，約耐0.03Mpa		
DKB	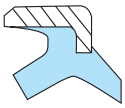	往覆軸用 For Reciprocating Shaft	外鐵殼有凹槽，雙唇口防塵密封件。		88–89頁

機械用骨架油封型號與特徵

Type and Features of Oil Seal for Machinery

型號 Type	形狀 Shape	工作向性 Application (Purpose)	油封特徵 Features	標準材料 Standard Material	目録頁數 Index Page
GA WPM	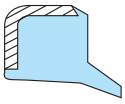	往覆軸用 For Reciprocating Shaft	外鐵殼內橡膠，單唇口防塵密封件。	NBR ACM SILICONE FPM	90–95頁
VK EC	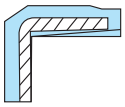	軸端蓋用 For Shaft End	外橡膠內骨架; 軸用端蓋。		96–101頁
TCN	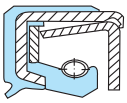	旋轉軸用 For Rotary Shaft	外表一面是鐵，一面是橡膠，雙唇口有彈簧，旋轉耐壓用, 約耐0.98Mpa		102–103頁
TCV	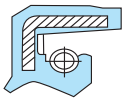	旋轉軸用 For Rotary Shaft	外橡膠內骨架，雙唇口有彈簧，旋轉耐壓用約耐0.3Mpa		104–105頁
VG	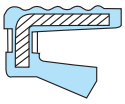	旋轉軸用 For Rotary Shaft	表面有螺紋，單唇口無彈簧，低磨擦系數，具有防塵作用, 約耐0.03Mpa		106–107頁
VC	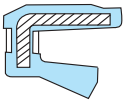	旋轉軸用 For Rotary Shaft	外圍橡膠之設計,凡用于各種材質之裝配環境,可適用軟質合金或具有塑性變型之塘孔，在塘孔表面受損時。單唇口無彈簧，低磨擦系數，具有防塵作用，約耐0.03Mpa		108–112頁
VB	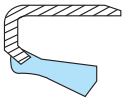	旋轉軸用 For Rotary Shaft	外鐵殼內橡膠，單唇口無彈簧. 低磨擦系數，旋轉防塵用, 約耐0.03Mpa		113–116頁

機械用骨架油封型號與特徵

Type and Features of Oil Seal for Machinery

型號 Type	形狀 Shape	工作向性 Application (Purpose)	油封特徵 Features	標準材料 Standard Material	目録頁數 Index Page
RB		旋轉軸用 For Rotary Shaft	由一個金屬托架保護彈性體密封件，主要是對外界污染物的入侵起隔阻作用。	NBR ACM SILICONE FPM	117–118頁
9RB	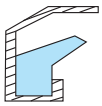	旋轉軸用 For Rotary Shaft	由一個金屬托架保護彈性體密封件，主要是對外界污染物的入侵起隔阻作用。		119頁
DC	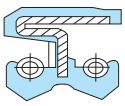	旋轉往覆用 For Rotary and Reciprocating Shaft	外橡膠內骨架，兩面有彈簧, 約耐0.03Mpa		120–124頁
DB	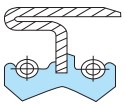	旋轉往覆用 For Rotary and Reciprocating Shaft	外骨架唇口爲橡膠，兩面有彈簧, 約耐0.03Mpa		125–126頁
TG4P		旋轉往覆用 For Rotary and Reciprocating Shaft 方向機專用 For Power Steering	唇口材料爲丁腈橡膠，金屬、骨架材料冷軋鈉板薄片，彈簧材料不銹鋼，支承環泵酢酰胺樹脂。		135–137頁
SZ4P		旋轉往覆用 For Rotary and Reciprocating Shaft 方向機專用 For Power Steering	唇口材料爲丁腈橡膠，金屬、骨架材料冷軋鈉板薄片，彈簧材料不銹鋼，支承環泵酢酰胺樹脂。		135–137頁
SCAP		旋轉往覆用 For Rotary and Reciprocating Shaft 方向機專用 For Power Steering	唇口材料爲丁腈橡膠，金屬、骨架材料冷軋鈉板薄片，彈簧材料不銹鋼，支承環泵酢酰胺樹脂。		135–137頁

機械用骨架油封型號與特徵

Type and Features of Oil Seal for Machinery

型號 Type	形狀 Shape	工作向性 Application (Purpose)	油封特徵 Features	標準材料 Standard Material	目録頁數 Index Page
CNB 1–7	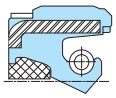	旋轉往覆用 方向機專用 For Rotary and Reciprocating Shaft For Power Steering	唇口材料爲丁腈橡膠，金屬、骨架材料冷軋鈉板薄片，彈簧材料不銹鋼，支承環泵酢酰胺樹脂。	NBR ACM SILICONE FPM	135–137頁
GNB 1–7	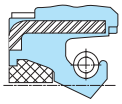	旋轉往覆用 方向機專用 For Rotary and Reciprocating Shaft For Power Steering	唇口材料爲丁腈橡膠，金屬、骨架材料冷軋鈉板薄片，彈簧材料不銹鋼，支承環泵酢酰胺樹脂。		135–137頁
TC4	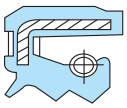	往覆軸用 For Reciprocating Shaft	外橡膠內骨架，雙唇口有彈簧，高磨擦系數，往覆密封用，約耐0.03Mpa		定制品 Customized Product
TG4	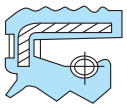	往覆軸用 For Reciprocating Shaft	外橡膠內骨架，雙唇口有彈簧，表面有螺紋，高磨擦系數，往覆密封用，約耐0.03Mpa		定制品 Customized Product
TB4	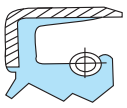	往覆軸用 For Reciprocating Shaft	外鐵殼內橡膠，雙唇口有彈簧，高磨擦系數，往覆密封用，約耐0.03Mpa		定制品 Customized Product
OTC		旋轉軸用 For Rotary Shaft	密封唇設置在外部的骨架油封，適用于旋轉結構的場合。		定制品 Customized Product
OSC		旋轉軸用 For Rotary Shaft	密封唇設置在外部的骨架油封，適用于旋轉結構的場合。		定制品 Customized Product

機械用骨架油封型號與特徵

Type and Features of Oil Seal for Machinery

型號 Type	形狀 Shape	工作向性 Application (Purpose)	油封特徵 Features	標準材料 Standard Material	目録頁數 Index Page
TCJ		旋轉軸用 For Rotary Shaft	衝程發動機、液力變矩器、洗衣機等的密封。唇端燒結有潤滑性優良的(聚四氟乙烯樹脂)膜的油封。適于在潤滑條件差及摩擦轉矩小的場合使用。	NBR ACM SILICONE FPM	定制品
TCK	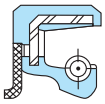	旋轉軸用 For Rotary Shaft	用于油且有粉塵場合的密封[最高壓力0.03MPa（0.3kgf/cm2）]和TC型、TB型使用目的相同，由于防塵唇材料使用特殊新纖維，耐塵性、通氣性、低摩擦特性優良。		定制品
QLFY	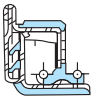	旋轉軸用 For Rotary Shaft	拖拉機、手扶拖拉機等的車軸、端軸的密封。分離泥水和油的油封，使用橡膠燒結的套筒與裝置。油封與套筒是一體化的，容易安裝		定制品
PVC1	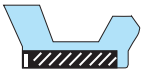	往覆用 For Reciprocating Shaft	汽車、家具及OA用氣壓棒		系列産品
PCG1	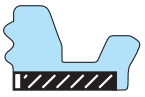	往覆用 For Reciprocating Shaft	汽車、家具及OA用氣壓棒		系列産品

通用橡膠密封圈型號與特徵

Type and Features for Standard Sealing Element

型號 Type	形狀 Shape	工作向性 Application (Purpose)	油封特徵 Features	標準材料 Standard Material	目録頁數 Index Page
RYT		油缸往覆用 For Hydraulic Cylinder	耐磨帶使用非金屬PTFE材料,具有良好的耐磨性。	PTFE	130頁
GSP		油缸往覆用 For Hydraulic Cylinder	一個滑動密封環和一個O型圈組成套的密封圈	PTFE	132–134頁
GSR		油缸往覆用 For Hydraulic Cylinder	一個滑動密封環和一個O型圈組成套的密封圈	PTFE	135–137頁
BR BL	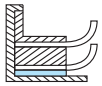	旋轉用 For Rotary Shaft	雙密封唇，適用于油壓馬達、泵浦、液静壓油壓元件等應用。密封唇上可添加左旋（BR）或右旋（BL）回油旋紋以提升密封性能。	不銹鋼+PTFE 碳鋼+PTFE Stainless Steel + PTFE Carbon Steel + PTFE	定制品 Customized Product
KR	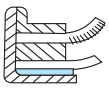	旋轉通用 For Rotary and Reciprocating Shaft	雙密封唇，適用于油壓馬達、泵浦、液静壓油壓元件等應用。 標準品壓力可達10bars，特製品25bars。溫度–90～250℃，線速為46m/s。	PTFE	定制品 Customized Product
KB	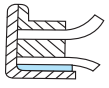	旋轉通用 For Rotary and Reciprocating Shaft	具有鏡面對稱配置的密封唇，可將兩種不同的流體隔離。如在離心機的密封應用。 標準品壓力可達10bars，特製品25bars。溫度–90～250℃，線速為48m/s。	PTFE	定制品 Customized Product
SRI		旋轉通用 For Rotary and Reciprocating Shaft	主唇分爲兩種材質，正面爲PTFE，反面爲橡膠。	PTFE NBR	定制品 Customized Product

通用橡膠密封圈型號與特徵

Type and Features for Standard Sealing Element

型號 Type	形狀 Shape	工作向性 Application (Purpose)	油封特徵 Features	標準材料 Standard Material	目録頁數 Index Page
SRII	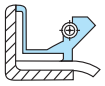	旋轉通用 For Rotary and Reciprocating Shaft	主唇分爲兩種材質，正面爲PTFE，反面爲橡膠。	PTFE NBR	定制品 Customized Product
PMH		油缸往覆用 For Hydraulic Cylinder	NBR或FPM 85 Sh A組合鋼骨架，帶金屬彈簧。	NBR FPM	138頁
PMP		氣動往覆用 For Pneumatic Reciprocating Shaft	NBR或FPM 85 Sh A組合鋼骨架。	NBR FPM	139頁
MGJ		旋轉通用 For Rotary and Reciprocating Shaft	橡膠夾織物骨架油封，用於困難的安裝條件下	NBR FPM	定制品 Customized Product
J型無骨架 Radial Seal without Metal Case		旋轉通用 For Rotary and Reciprocating Shaft	工作壓力不大於0.03Mpa，温度爲－40～120℃。	NBR FPM	系列産品 Other Product in List
VA	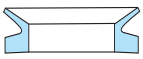	軸用密封 Oil Seal for Shaft	有較好的活動性和適應性,可補償較大的公差和角度偏差,形成軸向密封作用。	NBR FPM	147–148頁
VS	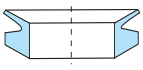	軸用密封 Oil Seal for Shaft	有較好的活動性和適應性,可補償較大的公差和角度偏差,形成軸向密封作用。	NBR FPM	149–150頁

通用橡膠密封圈型號與特徵
Type and Features for Standard Sealing Element

型號 Type	形狀 Shape	工作向性 Application (Purpose)	油封特徵 Features	標準材料 Standard Material	目録頁數 Index Page
華司油封 Bonded Seal	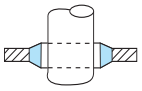	靜密封用 Static Seal	800、804系列	NBR FPM	151–155頁
修護套 Shaft Sleeve		修護軸用 Shaft Bushing	由一薄壁圓管和一安裝法蘭組成。	不繡鋼 Stainless	206–214頁

空壓油封特徵 國際通用密封元件 密封墊片
Type and Features of Pneumatic Seal and Gasket

型號 Type	形狀 Shape	工作向性 Application (Purpose)	油封特徵 Features	標準材料 Standard Material	目録頁數 Index Page
APA	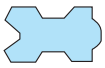	往覆運動用 For Reciprocating Movement	孔用，温度－35～120℃。	NBR FPM	140–146頁
PSD		往覆運動用 For Reciprocating Movement	孔用，温度－20～120℃。	NBR FPM	140–146頁
APG		往覆運動用 For Reciprocating Movement	孔用，温度－35～120℃。	NBR FPM	140–146頁
MYA		往覆運動用 For Reciprocating Movement	孔軸通用，温度－25～120℃。	NBR FPM	140–146頁

空壓油封特徵 國際通用密封元件 密封墊片

Type and Features of Pneumatic Seal and Gasket

型號 Type	形狀 Shape	工作向性 Application (Purpose)	油封特徵 Features	標準材料 Standard Material	目録頁數 Index Page
SDR		防塵用 Wiper	防塵密封用，温度－25～120℃。	NBR FPM	140–146頁
PDU		防塵用 Wiper	軸用，温度－55～120℃。	NBR FPM	140–146頁
SKY		往覆運動用 For Reciprocating Movement	孔軸通用，温度－25～120℃。	NBR FPM	140–146頁
UPH	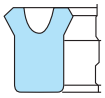	油缸往覆用 For Hydraulic Cylinder	這可用于活塞和活塞杆密封。此密封件有大的截面，可用于大範圍的操作。使用的丁腈橡膠和氟橡膠材料保證有廣泛的工作温度範圍。使用的規格廣泛。	NBR FPM	系列産品 Other Product in List
LBH	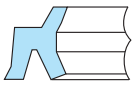	往覆用 For Reciprocating Shaft	這是一種防止粉塵進入，保護設備并保持密封性能的密封件。這是一種防刮油雙唇口全橡膠防塵密封件。用丁腈橡膠和氟橡膠作材料的密封件適用于廣泛的工作温度。	NBR FPM	系列産品 Other Product in List

密封件所使用的主要橡膠種類與特性

(Type and features of rubber for oil seals)

化成橡膠的物理性質與特性	橡膠種類 (Rubber type)	天然橡膠 (NR)	合成天然橡膠 (IR)	丁腈橡膠 (NBR)	氫化丁腈橡膠(HNBR)	乙烯、丙烯橡膠 (EPDM)
	可能JIS的硬度範圍 Scale of JIS hardness	10~100	20~200	15~100	55~90	30~90
	張力强度 Tension strength	◎	◎	◎○	◎	◎○
	反彈性 Rebounding	◎	◎	○	○	○
	生裂 Breaking	◎	◎	○	○	△
	耐磨耗性 Antifriction	◎	◎	◎	◎○	○
	耐彎曲龜裂性 Anti-bending	◎	◎	○	○	○
	耐熱性℃最高使用温度 Heat resistance	70	100	100	150	125
	耐寒性℃(脆化温度) Cold resistance	−20~−50	−20~−55	−20~−55	−40	−40~−55
	耐老化形 Aging resistance	○	○	◎	◎	◎
	耐光性 Light resistance	○	○	○	○	◎
	耐臭氧性 Ozone resistance	×	×	△	◎	◎
	耐焰性 Fire resistance	×	×	×	×	×△
	零絶緣性(Ωcm) 體積固有電阻 Insulation: solid volume with resistance	$10^{10\sim15}$	$10^{10\sim15}$	$10^{2\sim10}$	$10^{2\sim10}$	$10^{10\sim15}$
	耐氣體透過性 Osmore resistance	○	○	○	○	○
	耐放射線性 Ration activity resistance	△○	△○	△○	△○	×
	耐化學藥品性 Chemical resistance	×	○	△○	○	◎
	耐油性 Oily resistance	×	×	◎	◎	×
	密水性 Water resistance	◎	◎	○	○	◎
	耐酸性 Acid resistance	△○	○	△	○	○◎
	耐鹼性 Alkaly resistance	△	◎	○	◎	◎
	耐水蒸氣性 Steam resistance	×	△○	×	△○	◎
	◎優 excellent　○可 good　△尚可 fair　×差 poor					

密封件所使用的主要橡膠種類與特性

(Type and features of rubber for oil seals)

化成橡膠的物理性質與特性	橡膠種類 (Rubber type)	亞克力橡膠 (ACM)	硅矽橡膠 (SI)	氟橡膠 (FPM)	全氟橡膠 (FFPM)	聚四氟乙烯 (PTFE)
	可能JIS的硬度範圍 Scale of JIS hardness	40~80	30~90	50~90	75~90	89~96
	張力强度 Tension strength	△	×	◎○	◎○	△×
	反弹性 Rebounding	△	◎	△	△	△○
	生裂 Breaking	△	×△	○	○	○
	耐磨耗性 Antifriction	○	×△	◎	◎	◎
	耐彎曲龜裂性 Anti-bending	○	×△	○	◎	△
	耐熱性℃最高使用温度 Heat resistance	150	225	232	320	280
	耐寒性℃(脆化温度) Cold resistance	0~−15	−60~−100	−26~−40	−10~−20	−100
	耐老化形 Aging resistance	◎	◎	◎	◎	◎
	耐光性 Light resistance	◎	◎	◎	◎	◎
	耐臭氧性 Ozone resistance	◎	◎	◎	◎	◎
	耐焰性 Fire resistance	×△	×△	◎	◎	◎
	零絶緣性(Ωcm) 體積固有電阻 Insulation: solid volume with resistance	$10^{8\sim10}$	$10^{11\sim15}$	$10^{15\sim18}$	$10^{15\sim18}$	$10^{12\sim13}$
	耐氣體透過性 Osmore resistance	○	△	◎	◎	◎
	耐放射線性 Ration activity resistance	○	△○	△○	◎	◎
	耐化學藥品性 Chemical resistance	×	◎○	◎	◎	◎
	耐油性 Oily resistance	×	△○	◎	◎	◎
	密水性 Water resistance	◎	○	○	◎	◎
	耐酸性 Acid resistance	△	△	◎	◎	◎
	耐鹼性 Alkaly resistance	×	△	◎	◎	◎
	耐水蒸氣性 Steam resistance	×	△○	△○	◎	○
	◎優 excellent　○可 good　△尚可 fair　×差 poor					

骨架油封剖析意示圖
(Diagram of a metal case oil seal)

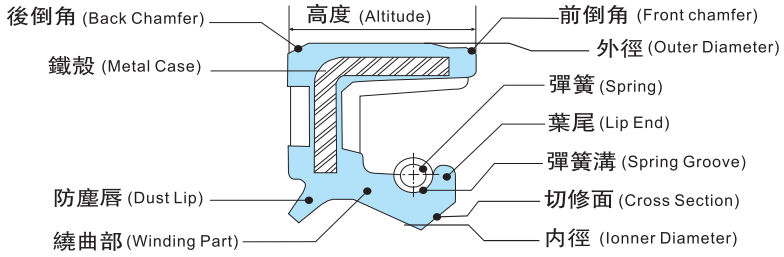

油封安裝軸與腔體部位公差表
(Installation tolerance for shaft and groove)

油封配套軸徑公差 (+/–) (Installation tolerance for the shaft)		油封配套孔徑公差 (+/–) (Installation tolerance for the groove)	
軸徑	公差	孔徑	公差
3.00以下	+0.000/–0.060		
3.01 ~ 6.00	+0.000/–0.075		
6.01 ~ 10.00	+0.000/–0.090	10.00以下	+0.022/–0.000
10.01 ~ 18.00	+0.000/–0.110	10.01 ~ 18.00	+0.027/–0.000
18.01 ~ 30.00	+0.000/–0.130	18.01 ~ 30.00	+0.033/–0.000
30.01 ~ 50.00	+0.000/–0.160	30.01 ~ 50.00	+0.039/–0.000
50.01 ~ 80.00	+0.000/–0.190	50.01 ~ 80.00	+0.046/–0.000
80.01 ~ 120.00	+0.000/–0.220	80.01 ~ 120.00	+0.054/–0.000
120.01 ~ 180.00	+0.000/–0.250	120.01 ~ 180.00	+0.063/–0.000
180.01 ~ 250.00	+0.000/–0.290	180.01 ~ 250.00	+0.072/–0.000
250.01 ~ 315.00	+0.000/–0.320	250.01 ~ 315.00	+0.081/–0.000
315.01 ~ 400.00	+0.000/–0.360	315.01 ~ 400.00	+0.089/–0.000
400.01 ~ 500.00	+0.000/–0.400	400.01 ~ 500.00	+0.097/–0.000

油封外徑擠壓公差表
(Installation tolerance for oil seal outer diamter)

油封外徑範圍 (Range of outer diameter of the oil seal)	外徑公差 (Tolerance of OD)		高度公差 (+) (Range of outer diameter of the oil seal)	真圓度 (Roundness)
	內包骨架 (+) (Inner metal case)	外露骨架 (+) (Outer metal case)		
6.01 ~ 10.00	0.15 ~ 0.30	0.10 ~ 0.20	0.25	0.25
10.01 ~ 18.00	0.15 ~ 0.30	0.10 ~ 0.20	0.25	0.25
18.01 ~ 30.00	0.15 ~ 0.30	0.10 ~ 0.20	0.25	0.25
30.01 ~ 50.00	0.15 ~ 0.30	0.10 ~ 0.20	0.25	0.25
50.01 ~ 80.00	0.20 ~ 0.35	0.13 ~ 0.23	0.35	0.35
80.01 ~ 120.00	0.20 ~ 0.35	0.15 ~ 0.25	0.50	0.50
120.01 ~ 180.00	0.25 ~ 0.45	0.18 ~ 0.28	0.65	0.65
180.01 ~ 250.00	0.25 ~ 0.45	0.20 ~ 0.30	0.80	0.80
250.01 ~ 315.00	0.25 ~ 0.45	0.20 ~ 0.30	0.8	0.8
315.01 ~ 400.00	0.30 ~ 0.55	0.23 ~ 0.35	1.0	1.0
400.01 ~ 500.00	0.30 ~ 0.55	0.23 ~ 0.35	1.0	1.0
500.01 ~ 640.00	0.35 ~ 0.65	0.25 ~ 0.38	1.0	1.0
640.01 ~ 800.00	0.40 ~ 0.75	0.28 ~ 0.40	1.0	1.0

*骨架油封的使用上，若安裝部位尺寸允許，油封高度可有 ± 1~2m/m的差異，亦可使用。
(Difference of altitude in ±1~2 mm are acceptable if the installation groove permit.)

軸心、轉速度、綫速度與油封材質適用表

Shaft RPM,surface speed & matreial

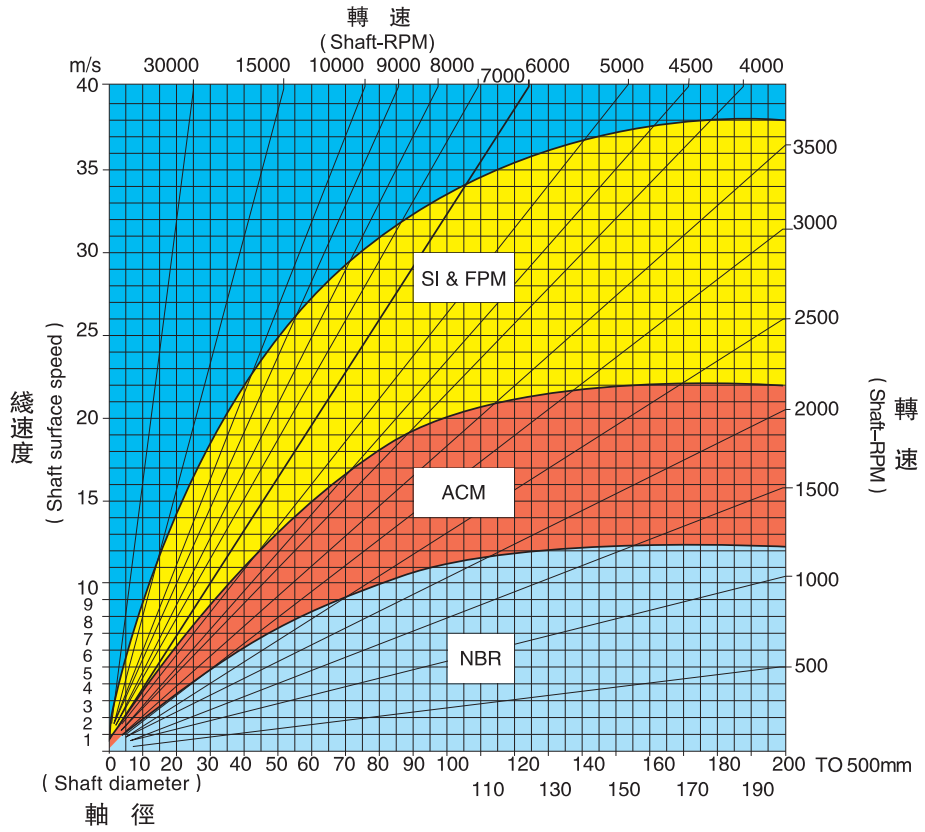

丁 腈 橡 膠	NBR	中低轉速用	Low to medium speed
亞克力橡膠	ACM	中高轉速用	Medium to high speed
氟 橡 膠	FPM	高 轉 速 用	High speed

油封安裝部位的設計
Shaft Sepcification & Chamfer

對軸的設計規格與倒角部分的形狀與尺寸軸的設計規格，如圖所示

軸的設計規範
(Shaft design suggestion)

型式 (Type) / 規格項目 (Item)	TC型、TB型、AS型、
材質 (Material)	機械結構用碳素鋼 (Carbon steel for mechanical usage)
表面硬度 (Surface hardness)	30HRC以上 (30 HRC or more)
表面粗糙度 (Surface roughness)	(0.63~0.2)μmRa
加工方法 (Processing method)	無進給精磨 (No feed grinding)
尺寸公差 (Tolerance)	h9

軸的倒角部分形狀與尺寸（軸徑300mm以下）
(Shape and specification for the chamfer of the shaft)

單位：mm

型式 (Type) / 軸徑分類 (Shaft chamfer range)	SC型、SB型 TB型、TC型	
軸徑d (Shaft diameter)	d_1	表中的d_1尺寸　設定比密封唇內徑小。油封應確實裝入，不得有唇口損傷、彈簧斷開等，請確保表中所示尺寸。 (The d1 diameter is set smaller than the ID of the oil seal. Please make sure the shaft is designed following the suggestion size.)
10以下 (diameter below 10mm)	d–1.5	
大于10~20以下	d–2.0	
大于20~30~以下	d–2.5	
大于30~40以下	d–3.0	
大于40~50以下	d–3.5	
大于50~70以下	d–4.0	
大于70~95以下	d–4.5	
大于95~130以下	d–5.5	
大于130~240以下	d–7.0	
大于240~300以下	d–11.0	

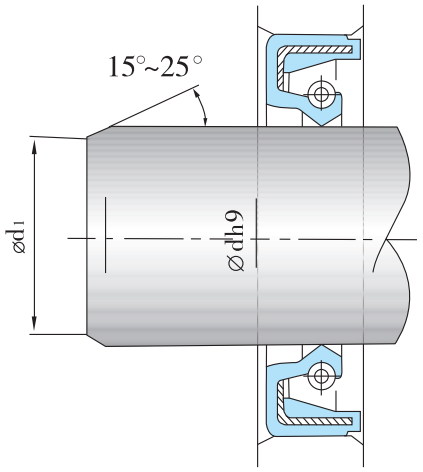

安裝示意圖

油封的組裝

A.油封的安裝方向①圖，請將密封唇口朝向密封介質一側
B.在組裝油封時，請使用下②圖所示夾具，組裝時請不要傾斜。

②正確安裝（安裝前油封先塗潤滑劑適量）
使用組裝夾具例

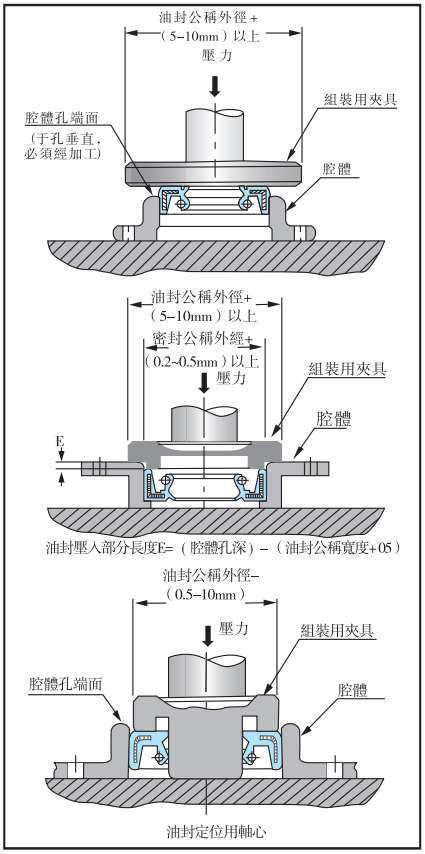

①油封的安裝方向

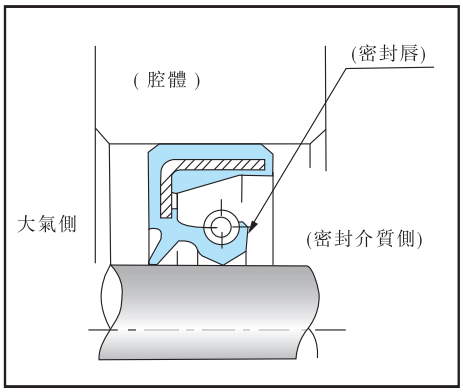

③組裝時使用夾具不當

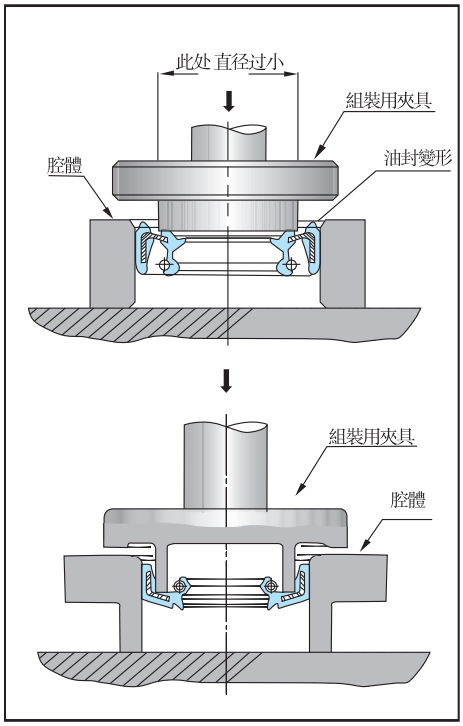

C. 組裝時請先將油封水平放置在腔體均勻加壓，如果將油封傾斜强制擠進去，如④那樣油封配合部分被擠壞、卡住，就會成爲泄漏起因。

④傾斜壓入

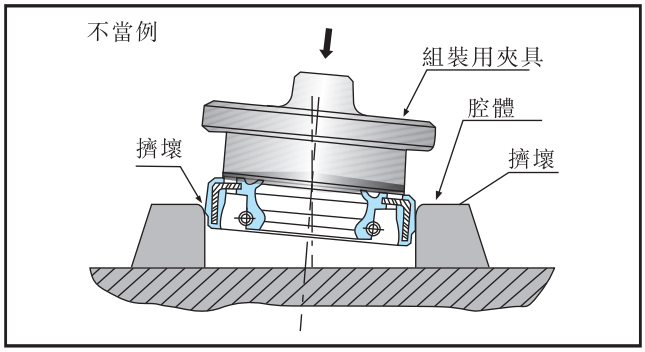

D. 現場無壓力機或不能使用壓力機時，請使用⑤圖所示擋板，在圓 周用手錘均勻敲打安裝，在安裝時油封不能直接使用錘敲打圖⑥。

⑤未用壓力機壓入時

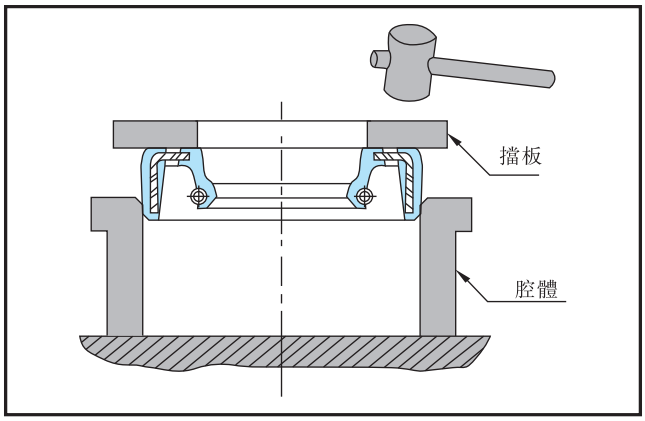

⑥用錘壓入不當例

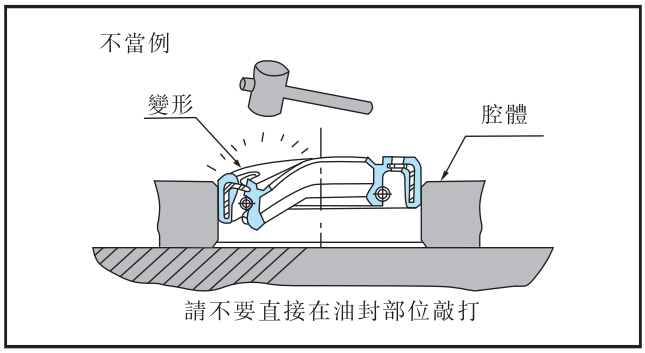

發生泄漏檢查要點

油封泄漏的原因

發現由油封泄漏時,首先應確認發生泄漏的部位。如果不是由油封泄漏，有時是由于附着了油脂等泄漏以外的原因而誤認爲是泄漏。

圖A、B所示主要原因圖爲各種代表性泄漏原因。

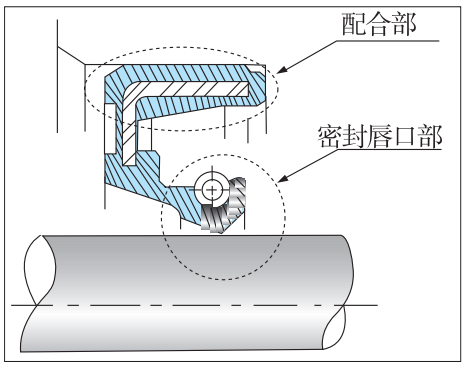

A. 由唇部泄漏的主要原因

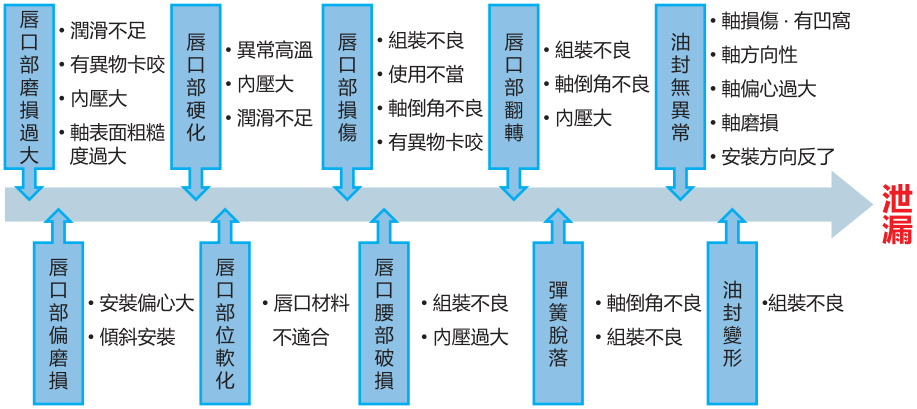

B. 由配合部泄漏的主要原因

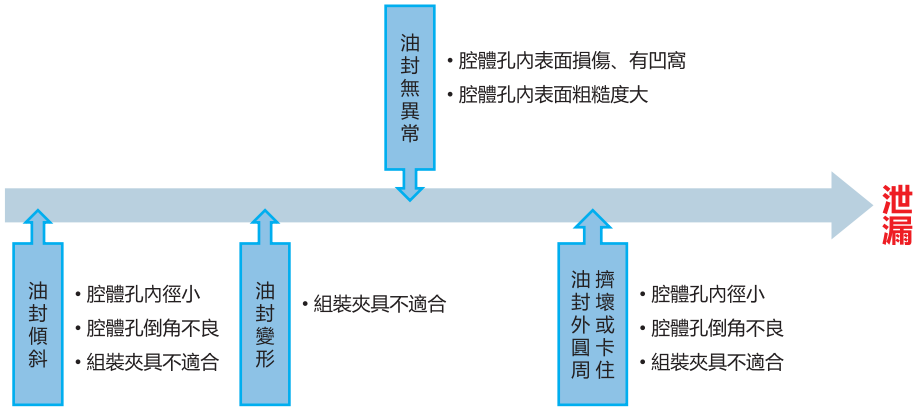

彈簧材料的種類及適用介質
Spring Material and Application

Fluid 密封介質 / Spring Material 彈簧材料		碳鋼 Steel		不鏽鋼 Stainless	
		SAE 1070	SAE 1080	SAE 30304	SAE 30316
潤滑油，脂	Oil, Grease	○		○	○
水	Water	×		○	○
水蒸氣	Steam	×		○	○
海水	Salt Water	×		×	○
酸	Acid	×		×	○
鹼	Alkali	×		○	○

註：SAE為美國汽車工程師協會
○可以使用
×請不要使用

國際常用油封型號對照表
Interchange for popular designs

SO GIANT	103	104	207	210	303	304
DIN3760	A	AS	B	BS	C	CS
CFW	BA	BASL	B1	B1 SL	B2	B2 SL
GOETZE	827N	827S	822N	822S	824N	824S
KACO	DG	DGS	DF	DFS	SFK	DFSK
STEFA	CB	CC	BB	BC	DB	DC
NOK	SC	TC	SB	TB	SA	TA

壓力換算表
Pressure Conversion Table

Pa	kPa	MPa	bar	kgf/cm²	atm	mmH_2O	mmHg或Torr
1	$1x10^{-3}$	$1x10^{-6}$	$1x10^{-5}$	$1.01972x10^{-5}$	$9.86923x10^{-6}$	$1.01972x10^{-1}$	$7.50062x10^{3}$
$1x10^{3}$	1	$1x10^{-3}$	$1x10^{-2}$	$1.01972x10^{-2}$	$9.86923x10^{-3}$	$1.01972x10^{2}$	7.50062
$1x10^{6}$	$1x10^{3}$	1	1x10	1.01972x10	9.86923	$1.01972x10^{5}$	$7.50062x10^{3}$
$1x10^{5}$	$1x10^{2}$	$1x10^{-1}$	1	1.01972	$9.86923x10^{-1}$	$1.01972x10^{4}$	$7.50062x10^{2}$
$9.80665x10^{4}$	9.80665x10	$9.80665x10^{-2}$	$9.80665x10^{-1}$	1	$9.67841x10^{-1}$	$1x10^{4}$	$7.35559x10^{2}$
$1.01325x10^{5}$	$1.01325x10^{2}$	$1.01325x10^{-1}$	1.01325	1.03323	1	$1.03323x10^{4}$	$7.60000x10^{2}$
9.80665	$9.80665x10^{-3}$	$9.80665x10^{-5}$	$9.80665x10^{-5}$	$1x10^{-4}$	$9.67841x10^{-5}$	1	$7.35559x10^{-2}$
$1.33322x10^{2}$	$1.33322x10^{-1}$	$1.33322x10^{-4}$	$1.33322x10^{-3}$	$1.35951x10^{-3}$	$1.31579x10^{-3}$	1.35951x10	1

註：$1Pa=1N/m^2$

SOG&H.T

Standard Seal Types

SIZE d*D*H	SIZE d*D*H	SIZE d*D*H
4*10*4	6*15*7	7*22*7
4*11*6	6*16*5	7*22*8
4*12*6	6*16*6	7*24*8
4*16*4	6*16*7	7*29*7
4*16*6	6*17*6	7*31*7
4*16*7	6*17*7	7.93*17.46*7.93
4.5*15*7	6*18*5	7.93*22.22*6.35
4.5*16*7	6*18*6	7.95*14.3*6.35
5*12*5	6*18*7	7.95*17.48*6.35
5*13*7	6*19*5	7.95*19.05*5.94
5*15*4	6*19*6	7.95*19.05*6.35
5*15*4.5/6.5	6*19*7	7.95*19.05*7.95
5*15*5	6*20*5.5	7.95*20.65*3.96
5*15*6	6*20*6	7.95*23.82*5.59
5*15*7	6*20*7	8*14*4
5*16*5	6*20.5*7	8*14*5
5*16*6	6*21*7	8*14*7
5*16*7	6*22*7	8*15*4
5*17*5	6*22*8	8*15*5
5*17*7	6*25*6	8*15*7
5*17*8	6*26*7	8*15*8
5*18*6	6*35*7	8*16*4
5*18*7	6.35*12.7*6.35	8*16*5
5*19*5	6.35*15.87*4.76	8*16*6
5*19*6	6.35*15.88*3.96	8*16*6.5
5*19*7	6.35*15.88*6.35	8*16*7
5*22*7	6.35*19.05*6.35	8*16*8
5*22*8	6.5*14.5*7	8*17*5
6*12*4	6.8*22*7	8*17*7
6*12*4.5	7*14*5	8*17.5*7
6*12*5	7*15*5	8*18*5
6*12*5.5	7*15*7	8*18*6
6*13*4.5	7*16*7	8*18*7
6*13*5	7*17*7	8*18*8
6*14*4	7*18*4	8*19*4
6*14*6	7*18*7	8*19*6
6*14.1*4	7*19*6	8*19*6.5
6*15*4	7*19*7	8*19*7
6*15*6	7*20*7	8*20*5

SOG&H.T

Standard Seal Types

SIZE d*D*H	SIZE d*D*H	SIZE d*D*H
8*20*7	9*25*7	10*20*9
8*20*8	9*25*8	10*20*9.5
8*21*6	9*26*7	10*21*10
8*22*4	9*26*8	10*21*4
8*22*5	9*29*7	10*21*5
8*22*6	9*30*7	10*21*7
8*22*7	9.15*16.2*4	10*22*10
8*22*8	9.53*19.05*4.78	10*22*4
8*23*5	9.53*19.05*6.35	10*22*5
8*23*7	9.53*20.65*9.53	10*22*6
8*24*7	9.53*22.23*6.35	10*22*7
8*25*7	9.53*25.4*6.35	10*22*8
8*25*8	9.53*25.4*9.35	10*23*7
8*26*6	9.53*25.4*9.53	10*23*8
8*26*7	9.53*31.75*7.95	10*23.5*10
8*28*5	10*16*4	10*23.5*7
8*28*7	10*16*5	10*24*10
8*34*7	10*16*6	10*24*4
8*34*8	10*17*4	10*24*5
8.5*18*7	10*17*5	10*24*6
9*16*4	10*17*6	10*24*7
9*16*5	10*17*7	10*24*8
9*16*6.5	10*18*4	10*25*10
9*17*4	10*18*5	10*25*4.5
9*17*4.5	10*18*6	10*25*5
9*17*5	10*18*7	10*25*6
9*18*5	10*18*8	10*25*7
9*18*6	10*18*9	10*25*8
9*18*7	10*19*3.5	10*26*5
9*19*4	10*19*4	10*26*5.5
9*19*5	10*19*5	10*26*7
9*19*6	10*19*7	10*26*8
9*19*7	10*19*8	10*27*7
9*20*6	10*20*4	10*28*7
9*20*7	10*20*4.5	10*28*8
9*21*5	10*20*5	10*28.5*8
9*22*7	10*20*6	10*30*10
9*23*7	10*20*7	10*30*4
9*24*7	10*20*8	10*30*7

SOG&H.T

Standard Seal Types

SIZE d*D*H	SIZE d*D*H	SIZE d*D*H
10*30*8	11.6*24*10	12*24*7.5
10*32*7	11.91*25.4*7.95	12*24*7/8
10*35*10	12*18*4	12*24*8
10*35*8	12*18*4.5	12*25*10
10*40*7	12*18*5	12*25*4
10*44*8.5	12*18*6	12*25*4.5
11*17*4	12*19*4	12*25*5
11*17*5	12*19*5	12*25*6
11*18*4	12*19*7	12*25*7
11*19*5	12*20*4	12*25*8
11*19*6	12*20*4.5	12*25.5*7
11*19*7	12*20*5	12*26*4
11*21*7	12*20*5.5	12*26*5
11*21*8	12*20*6	12*26*6
11*22*6	12*20*7	12*26*7
11*22*7	12*21*4	12*26*8
11*22*8	12*21*5	12*26.5*4.6
11*23*7	12*21*7	12*27*5
11*23*8	12*22*4	12*27*7
11*24*7	12*22*4.5	12*27*8
11*25*5	12*22*5	12*27*9
11*25*7	12*22*6	12*28*10
11*25*8	12*22*6.5	12*28*4
11*26*7	12*22*7	12*28*5
11*28*7	12*22*8	12*28*6
11*29*7	12*22*9	12*28*7
11*30*10	12*22.5*7	12*28*8
11*30*5	12*23*7	12*28.5*7
11*30*8	12*23*8	12*30*10
11*35*7	12*23*9	12*30*5
11.11*25.4*6.35	12*23.5*7	12*30*6
11.13*19.05*6.35	12*23.5*8	12*30*7
11.13*22.23*6.35	12*24*10	12*30*8
11.13*25.4*9.53	12*24*4	12*30*9
11.13*28.58*6.35	12*24*4.5	12*32*10
11.13*28.58*9.53	12*24*5	12*32*5
11.13*31.75*6.35	12*24*6	12*32*6
11.13*31.75*7.95	12*24*6.5	12*32*7
11.5*24*10	12*24*7	12*32*8

SOG&H.T Standard Seal Types

SIZE d*D*H	SIZE d*D*H	SIZE d*D*H
12*34*7	12.7*34.92*6.35	13.7*24*5
12*35*10	12.7*34.92*9.53	14*20*4
12*35*4.3	13*19*4	14*20*5
12*35*5	13*20*4	14*20*7
12*35*7	13*20*5	14*21*4
12*37*10	13*20*7	14*21*7
12*37*7	13*21*4	14*22*4
12*40*10	13*22*4	14*22*5
12*42*8	13*22*5	14*22*6
12*45*7	13*22*5.5	14*22*7
12*47*7	13*22*6	14*23*6
12.5*20*5	13*22*7	14*23*7
12.5*22*4.5	13*23*6.5	14*24*4
12.5*22.55*5.5	13*23*7	14*24*5
12.5*25*8	13*24*5	14*24*6
12.7*19.05*3.18	13*24*6	14*24*7
12.7*19.05*4.19	13*24*7	14*24*8
12.7*19.05*6.35	13*25*4	14*25*4
12.7*21.92*4.78	13*25*5	14*25*5
12.7*22.23*3.18	13*25*6	14*25*6
12.7*22.23*4.78	13*25*7	14*25*7
12.7*22.23*6.35	13*26*5	14*25*8
12.7*22.23*7.95	13*26*7	14*25*9
12.7*25.07*6.35	13*26*8	14*26*4
12.7*25.4*3.18	13*26*9	14*26*5
12.7*25.4*4.78	13*27*7	14*26*6
12.7*25.4*6.35	13*27*8	14*26*7
12.7*25.4*7.93	13*28*5	14*26*8
12.7*25.4*9.52	13*28*7	14*26*8.5
12.7*25.4*9.53	13*30*10	14*27*10
12.7*26*6	13*30*5	14*27*6
12.7*26.98*6.35	13*30*7	14*27*7
12.7*28.58*4.78	13*30*8	14*28*10
12.7*28.58*6.35	13*32*6	14*28*4
12.7*28.58*7.95	13*32*7	14*28*5
12.7*28.58*9.53	13*35*10	14*28*7
12.7*31.75*6.35	13*35*7	14*28*8
12.7*31.75*7.95	13.44*25.4*9.65	14*29*7
12.7*32*7	13.49*27*7.95	14*30*10

SOG&H.T Standard Seal Types

SIZE d*D*H	SIZE d*D*H	SIZE d*D*H
14*30*4.5	15*21*7	15*28*8
14*30*5	15*22*4	15*29*7
14*30*6	15*22*5	15*29*9
14*30*7	15*22*7	15*30*10
14*30*8	15*22.5*6	15*30*12
14*32*10	15*23*4	15*30*4.5
14*32*5	15*23*5	15*30*5
14*32*7	15*23*6	15*30*5.5
14*32*9	15*23*7	15*30*6
14*34*7	15*23.3*6	15*30*7
14*35*10	15*24*10	15*30*8
14*35*4.5	15*24*4	15*31*7
14*35*7	15*24*4.5	15*32*10
14*35*8	15*24*5	15*32*5
14*36*7	15*24*6	15*32*5.5
14*40*10	15*24*7	15*32*6
14*40*7	15*25*10	15*32*7
14.25*25.27*5.33	15*25*4.6	15*32*8
14.28*25.4*6.35	15*25*5	15*32*9
14.29*34.92*6.35	15*25*6	15*33*10
14.3*22.23*4.78	15*25*7	15*33*6
14.3*25.4*4.78	15*25.5*4.6	15*33*7
14.3*25.4*6.35	15*25.5*7	15*34*6
14.3*25.4*9.53	15*26*4	15*35*10
14.3*27*4.78	15*26*4.5	15*35*5
14.3*28.58*6.35	15*26*5	15*35*6
14.3*28.58*7.95	15*26*6	15*35*7
14.3*28.58*9.53	15*26*7	15*35*8
14.3*31.75*6.35	15*26*8	15*36*6
14.3*31.75*9.53	15*26*9	15*36*7
14.3*34.92*6.35	15*26.5*4.6	15*37*10
14.3*34.93*9.53	15*27*5	15*37*6
14.5*25*7	15*27*7	15*37*7
14.5*28*7	15*28*10	15*38*7
14.8*30*10	15*28*4	15*40*10
14.8*30*5	15*28*5	15*40*7
14.8*30*7.5	15*28*5.5	15*40*8
15*21*4	15*28*6	15*42*10
15*21*5	15*28*7	15*42*7

SOG&H.T Standard Seal Types

SIZE d*D*H	SIZE d*D*H	SIZE d*D*H
15*42*8	15.88*39.7*9.53	16*30*7
15*47*7	15.88*40*7.95	16*30*8
15*48*8	15.88*41.28*6.35	16*32*10
15*50*6	15.88*47.22*7.95	16*32*5
15*50*7	16*22*4	16*32*6
15.08*23.82*4.76	16*22*5	16*32*7
15.09*28.58*9.53	16*22*7	16*32*8
15.09*34.92*4.78/5.9	16*22.63*4.37	16*32*9
15.09*35.18*7.95	16*22.75*4.2	16*33*11
15.5*32*6	16*23*4	16*33*8
15.6*25.5*7	16*24*4	16*34*4
15.7*25.5*4.6	16*24*5	16*34*7
15.87*28.57*4.76	16*24*6	16*35*10
15.87*28.57*9.52	16*24*6.5	16*35*5
15.87*34.92*6.35	16*24*7	16*35*6
15.88*23.83*4.78	16*24*8	16*35*7
15.88*25.4*4.76	16*25*10	16*35*8
15.88*25.4*4.78	16*25*5	16*35*9
15.88*25.4*6.35	16*25*6	16*36*7
15.88*27*4.78	16*25*7	16*37*6
15.88*27*6.35	16*26*12	16*37*7
15.88*28.45*3.96	16*26*4	16*38*7
15.88*28.58*4.78	16*26*5	16*38*8
15.88*28.58*6.35	16*26*6	16*40*10
15.88*28.58*7.93	16*26*7	16*40*5
15.88*28.58*7.95	16*26*8	16*40*7
15.88*28.58*9.53	16*27*7	16*40*8
15.88*31.75*4.78	16*28*4	16*42*6
15.88*31.75*6.35	16*28*6	16*42*7
15.88*31.75*7.95	16*28*7	16*47*7
15.88*31.75*9.53	16*28*8	16*52*7
15.88*33.35*6.35	16*28.5*8	16.66*27*6.35
15.88*34.92*6.35	16*28.58*7	16.66*31.75*6.35
15.88*34.92*7.95	16*29*7	16.66*38.1*6.35
15.88*34.92*9.53	16*29*9.5	16.66*40.01*6.35
15.88*34.93*9.53	16*30*10	16.66*40.08*6.35
15.88*38.1*6.35	16*30*4.5	16.9*28*5
15.88*38.1*7.95	16*30*5	17*24*5
15.88*38.1*9.53	16*30*6	17*24*7

SOG&H.T Standard Seal Types

SIZE d*D*H	SIZE d*D*H	SIZE d*D*H
17*25*10	17*32*4	17*47*10
17*25*4	17*32*5	17*47*7
17*25*5	17*32*6	17*47*8
17*25*6	17*32*7	17*48*8
17*25*7	17*32*7.5	17.07*25.4*4.78
17*25*8	17*32*8	17.07*28.58*6.35
17*25.5*7	17*33*7	17.3*25.4*6
17*26*4	17*33*8	17.4*30*7
17*26*4.5	17*34*4	17.48*25.4*6.35
17*26*6	17*34*7	17.48*28.58*6.35
17*26*7	17*34*8	17.48*28.58*7.95
17*27*10	17*34.5*4	17.48*30.18*4.78
17*27*5	17*35*10	17.48*30.18*6.35
17*27*6	17*35*5	17.48*31.75*6.35
17*27*6.35	17*35*6	17.48*34.92*6.35
17*27*7	17*35*7	17.48*34.92*9.53
17*27*8	17*35*8	17.48*34.93*7.95
17*28*4	17*35*9	17.48*38.1*6.35
17*28*4.5	17*36*7	17.48*38.1*9.53
17*28*5	17*37*10	17.48*41.28*6.35
17*28*5.5	17*37*5	18*24*4
17*28*6	17*37*7	18*24*5
17*28*6.5	17*37*8	18*24*6
17*28*7	17*38*11	18*24*7
17*28*7/13	17*38*7	18*25*4
17*28*8	17*38*8	18*25*5
17*28.58*7	17*39.9*5	18*25*6
17*29*5	17*40*10	18*25*7
17*29*6.5	17*40*5	18*26*4.5
17*29*7	17*40*6	18*26*6
17*29*8	17*40*7	18*26*7
17*30*10	17*40*8	18*27*5
17*30*4	17*40*8.5	18*27*7
17*30*5	17*40*9	18*28*4
17*30*6	17*42*5	18*28*5
17*30*7	17*42*7	18*28*6
17*30*8	17*42*8	18*28*7
17*31*7	17*45*7	18*28*7.5
17*32*10	17*46*6	18*28*8

SOG&H.T Standard Seal Types

SIZE d*D*H	SIZE d*D*H	SIZE d*D*H
18*28*9	18*42*8	19*35*10
18*29*5	18*43*8.5	19*35*10.3
18*29*7	18*44*8	19*35*5
18*30*10	18*45*8	19*35*6
18*30*5	18*47*10	19*35*7
18*30*6	18*52*8	19*35*8
18*30*7	18.26*28.58*6.35	19*36*7
18*30*7/9	18.26*31.75*6.35	19*36*8
18*30*8	18.9*30*5	19*37*10
18*31*7	19*25*6	19*37*7
18*32*10	19*26*5.5	19*38*10
18*32*4	19*27*5	19*38*7
18*32*4.5	19*27*6	19*38*8
18*32*5	19*28*5	19*39*7
18*32*6	19*28*6	19*40*10
18*32*7	19*28*7	19*40*7
18*32*8	19*29*5	19*40*8
18*33*8	19*29*6	19*41*7
18*34*7	19*29*6.5	19*41.5*8
18*34*8	19*29*7	19*42*10
18*35*10	19*30*10	19*42*7
18*35*5	19*30*4.5	19*42*8
18*35*6	19*30*5	19*43*8
18*35*7	19*30*6	19*47*10
18*35*8	19*30*6.5	19*47*7
18*36*6	19*30*7	19*47*8
18*36*7	19*30*7/8	19*52*8
18*37*5	19*30*8	19.05*25.4*3.18
18*37*6	19*31*8	19.05*25.4*3.96
18*37*7	19*32*5	19.05*25.4*4.78
18*37*8	19*32*6	19.05*25.4*6.35
18*38*10	19*32*7	19.05*28.58*4.78
18*38*5	19*32*8	19.05*28.58*6.35
18*38*6	19*33*7	19.05*28.58*7.95
18*38*7	19*33*8	19.05*30.16*6.35
18*38*9	19*33.35*10	19.05*30.18*3.18
18*40*10	19*34*6	19.05*30.18*4.78
18*40*7	19*34*7	19.05*30.18*6.35
18*42*7	19*34*8	19.05*31.75*4.78

SOG&H.T Standard Seal Types

SIZE d*D*H	SIZE d*D*H	SIZE d*D*H
19.05*31.75*6.35	19.84*44.6*8.33	20*33*7
19.05*31.75*7.95	19.84*52.17*9.53	20*33*8
19.05*31.75*9.53	20*26*4	20*33*9
19.05*33.33*6.35	20*26*5	20*34*4
19.05*33.33*7.93	20*26*5.6	20*34*6
19.05*33.33*7.95	20*27*5	20*34*7
19.05*33.35*6.35	20*28*10	20*34*8
19.05*33.35*7.95	20*28*4	20*35*10
19.05*33.73*6.35	20*28*4.5	20*35*12
19.05*34.52*6.35/9.5	20*28*5	20*35*13
19.05*34.92*6.35	20*28*6	20*35*4
19.05*34.92*7.95	20*28*7	20*35*4.5
19.05*34.92*9.53	20*28*8	20*35*5
19.05*34.93*6.35	20*28.4*4	20*35*5.5
19.05*34.93*9.53	20*29*7	20*35*6
19.05*36.53*6.35	20*30*10	20*35*7
19.05*38.1*4.78	20*30*4	20*35*8
19.05*38.1*6.35	20*30*4.5	20*36*11
19.05*38.1*7.95	20*30*4.7	20*36*5
19.05*38.1*9.52	20*30*5	20*36*6
19.05*38.1*9.53	20*30*6	20*36*7
19.05*40*6.35	20*30*6.5/8	20*36*8
19.05*41.28*6.35	20*30*7	20*37*10
19.05*41.28*7.95	20*30*7/9	20*37*6
19.05*41.28*9.53	20*30*8	20*37*7
19.05*44.45*6.35	20*30*9	20*37*8
19.05*44.45*7.93	20*31*5	20*38*10
19.05*44.45*7.95	20*31*5/7	20*38*15
19.05*47.63*6.35	20*31*6	20*38*5
19.3*30*4.7	20*31*7	20*38*6
19.5*29*5	20*32*10	20*38*7
19.5*33.35*10	20*32*12	20*38*8
19.8*30*5	20*32*5	20*38*9
19.8*30*6	20*32*6	20*39*4.5
19.8*30*6(蓝色)	20*32*7	20*39*6
19.84*31.75*6.35	20*32*8	20*40*10
19.84*34.92*6.35	20*32*8.5	20*40*11
19.84*38.1*9.53	20*33*10	20*40*4
19.84*44.45*7.95	20*33*5	20*40*5

SOG&H.T Standard Seal Types

SIZE d*D*H	SIZE d*D*H	SIZE d*D*H
20*40*6	20*52*5	21*32*5
20*40*6/8	20*52*6	21*32*5.5
20*40*7	20*52*7	21*32*7
20*40*8	20*52*8	21*32*8
20*40*9	20*52*9	21*33*7
20*41*10	20*54*7	21*35*10
20*41*7	20*55*10	21*35*13
20*41*8	20*55*7	21*35*4
20*42*10	20*57*8	21*35*6
20*42*12	20*58*7	21*35*7
20*42*6	20*60*10	21*35*8
20*42*7	20*62*10	21*36*7
20*42*8	20*62*6	21*37*7
20*43*7.5	20*64*5	21*40*10
20*43*8	20*65*6.5	21*40*5
20*44*7	20*72*10	21*40*7
20*45*10	20*72*5	21*42*7
20*45*7	20.24*31.75*9.53	21*45*7
20*45*8	20.65*28.58*6.35	21*47*10
20*46*6	20.65*30.18*6.35	21*48*8
20*46*8	20.65*31.75*4.76	21*52*8
20*47*10	20.65*31.75*4.78	21.4*32*6
20*47*12	20.65*33.73*8.74	21.44*34.92*9.53
20*47*5	20.65*34.92*6.35	21.82*40.08*7.54
20*47*5.3	20.65*34.92*7.95	22*28*4
20*47*7	20.65*34.92*9.53	22*28*8
20*47*8.5	20.65*34.93*12.7	22*29*4
20*47*9	20.65*38.1*6.35	22*30*4
20*47.08*12.7	20.65*41.28*6.35	22*30*5
20*48*10	20.65*44.45*4.78	22*30*5.5
20*48*7	20.65*44.45*6.35	22*30*6
20*48*9	20.65*47.63*6.35	22*30*7
20*49*8	20.65*47.63*9.53	22*30*8
20*50*10	21*28*4	22*31*5
20*50*12	21*28*5	22*31*6.5
20*50*7	21*30*6.5	22*31*7
20*50*8	21*31*3.5/4.5	22*32*10
20*52*10	21*31*5	22*32*4
20*52*12	21*31*7	22*32*4.5

SOG&H.T Standard Seal Types

SIZE d*D*H	SIZE d*D*H	SIZE d*D*H
22*32*5	22*38*8	22*50*8
22*32*5.5	22*39*10	22*52*10
22*32*6	22*39*6	22*52*7
22*32*6.5	22*39*8	22*52*8
22*32*7	22*40*10	22*56*10
22*32*8	22*40*12	22*56*7
22*33*10	22*40*16	22*62*10
22*33*6	22*40*5	22*62*12
22*33*6.5	22*40*6/8	22*62*7
22*33*7	22*40*7	22*65*8
22*34*10	22*40*8	22.22*31.75*4.76
22*34*5	22*41*6	22.22*35*10
22*34*6	22*41.1*8	22.22*44.45*9.52
22*34*6.5	22*41.25*7	22.23*30.18*3.96
22*34*7	22*42*10	22.23*31.75*4.78
22*34*8	22*42*11	22.23*31.75*6.35
22*35*10	22*42*12	22.23*31.75*9.53
22*35*13	22*42*5	22.23*33.35*5.16
22*35*5	22*42*6	22.23*33.35*6.35
22*35*5.5	22*42*7	22.23*33.35*7.95
22*35*6	22*42*8	22.23*34.92*5.16
22*35*7	22*42.5*8	22.23*34.92*6.35
22*35*8	22*43*7	22.23*34.92*7.95
22*35*9	22*43*8	22.23*34.92*9.53
22*35.3*7	22*44*11	22.23*34.93*6.35
22*36*10	22*44*7	22.23*34.93*7.95
22*36*5	22*45*10	22.23*35.15*9.53
22*36*6	22*45*11	22.23*36.12*6.35
22*36*7	22*45*5	22.23*38.1*6.35
22*36*8	22*45*7	22.23*38.1*7.95
22*37*10	22*45*8	22.23*38.1*9.53
22*37*6	22*47*10	22.23*41.25*6.35
22*37*7	22*47*7	22.23*41.28*11.13
22*37*7/8	22*48*10	22.23*41.28*7.95
22*38*10	22*48*5	22.23*41.28*9.53
22*38*5	22*48*7	22.23*42.88*14.3
22*38*6	22*50*10	22.23*42.88*9.53
22*38*7	22*50*4	22.23*44.45*9.53
22*38*7/8	22*50*7	22.23*46.43*6.35

SOG&H.T Standard Seal Types

SIZE d*D*H	SIZE d*D*H	SIZE d*D*H
22.23*47.63*6.35	23*48*10	24*37*5
22.23*47.63*9.53	23*52*10	24*37*7
22.23*47.68*6.35	23*52*11	24*37*8.1
22.23*50.8*6.35	23*55*7	24*38*10
22.23*50.8*9.53	23.01*34.14*6.35	24*38*5
22.23*52.4*11.13	23.5*40*7.5	24*38*7
22.23*53.97*9.53	23.81*44.45*9.52	24*38*8
22.5*32*5	23.83*34.92*6.35	24*38.5*10
22.7*47*7	23.83*34.93*6.35	24*39*8
23*30*5	23.83*38.1*6.35	24*40*10
23*32*5	23.83*38.1*9.53	24*40*12
23*32*7	23.83*41.28*6.35	24*40*6
23*33*8	23.83*41.28*7.95	24*40*7
23*34*8	23.83*41.28*9.53	24*40*8
23*35*6	23.83*43.66*4.37	24*41*10
23*35*7	23.83*44.45*6.35	24*42*10
23*35*8	23.83*44.45*9.53	24*42*7
23*36*13	23.83*51.99*7.95	24*42*8
23*36*6	24*32*4	24*43*6
23*36*7	24*32*5	24*43*7
23*37*7	24*32*5.5	24*43*9
23*38*7	24*32*7	24*44*6
23*38*8	24*33*5	24*44*7
23*40*10	24*33*7	24*45*10
23*40*5	24*34*5.5	24*45*11
23*40*6	24*34*7	24*45*5
23*40*7	24*34.5*5	24*45*6
23*40*8	24*35*10	24*45*7
23*42*10	24*35*5	24*45*8
23*42*6	24*35*5.5	24*46*10
23*42*7	24*35*6	24*46*7
23*42*8	24*35*7	24*47*10
23*43*7	24*35*8	24*47*5
23*43*8	24*35*8.5	24*47*6
23*45*11	24*36*5.5	24*47*7
23*45*8	24*36*6	24*47*8
23*47*10	24*36*7	24*48*10
23*47*7	24*36*8	24*48*7
23*47*8	24*36*9	24*48*8

SOG&H.T Standard Seal Types

SIZE d*D*H	SIZE d*D*H	SIZE d*D*H
24*49*12	25*35*6	25*41.25*8
24*50*10	25*35*7	25*41.28*7
24*51*7	25*35*8	25*41.5*6
24*52*10	25*35*8.5	25*42*10
24*52*11	25*35*9	25*42*12
24*52*7	25*36*10	25*42*5
24*52*8	25*36*6	25*42*6
24*55*10	25*36*7	25*42*7
24*62*10	25*36*8	25*42*8
24*62*7	25*36*9	25*42*8.5
24*78*8	25*37*10	25*42*9
24.21*38.1*6.35	25*37*4	25*42.6*6
24.5*40*8.5	25*37*5	25*42.9*9.5
24.59*52.02*9.53	25*37*6	25*43*10
24.61*34.92*6.76	25*37*7	25*43*6
24.61*38.1*7.95	25*37*8	25*43*7
24.61*41.28*7.95	25*38*10	25*43*8
24.61*42.88*7.95	25*38*5	25*43*9
24.61*44.45*6.35	25*38*6	25*44*7
24.61*52.17*9.53	25*38*7	25*44*8
24.61*53.97*7.95	25*38*8	25*44.45*7
24.61*54.38*9.53	25*38.3*10	25*45*10
24.99*38.1*6.35	25*39*7	25*45*11
24.99*44.45*5	25*39*9	25*45*5
25*31*7	25*40*10	25*45*7
25*32*4	25*40*11	25*45*8
25*32*5	25*40*12	25*45*9
25*32*6	25*40*5	25*46*10
25*32*7	25*40*6	25*46*15
25*33*4	25*40*7	25*46*7
25*33*6	25*40*7.5	25*46*8
25*33*7	25*40*8	25*47*10
25*34*5	25*40*9	25*47*6
25*34*6	25*41*6	25*47*6.35
25*34*7	25*41*7	25*47*7
25*35*10	25*41.1*6	25*47*8
25*35*4	25*41.1*8	25*47*8.7
25*35*5	25*41.25*6	25*47*9
25*35*5.5	25*41.25*7	25*48*10

SOG&H.T Standard Seal Types

SIZE d*D*H	SIZE d*D*H	SIZE d*D*H
25*48*6	25*62*7	25.4*42.9*5
25*48*7	25*62*8	25.4*44.45*11.13
25*48*8	25*62*9	25.4*44.45*4.78
25*49*10	25*65*10	25.4*44.45*5.15
25*49*9	25*65*12	25.4*44.45*5.16
25*50*10	25*65*7	25.4*44.45*6.35
25*50*12	25*68*12	25.4*44.45*7.95
25*50*5	25*68*8	25.4*44.45*9.52
25*50*7	25*70*10	25.4*44.45/49.6*15.8
25*50*8	25*70*17	25.4*44.5*6.35
25*51*10	25*70*7	25.4*46.05*7.95
25*51*11	25*72*7	25.4*46.43*11.13
25*52*10	25*72*8	25.4*47.02*6.35
25*52*12	25*45*12	25.4*47.62*6.35
25*52*15	25*32*6.8	25.4*47.63*11.13
25*52*5	25.4*31.75*3.18	25.4*47.63*6.35
25*52*6	25.4*31.75*3.96	25.4*47.63*7.95
25*52*7	25.4*31.75*6.35	25.4*47.63*9.53
25*52*8	25.4*34.92*4.78	25.4*50.8*11.13
25*52*9	25.4*34.92*6.35	25.4*50.8*12.7
25*53*10	25.4*34.92*7.14	25.4*50.8*6.35
25*53*7	25.4*34.93*6.35	25.4*50.8*7.95
25*54*7	25.4*35*7	25.4*50.8*9.52
25*54*8	25.4*36.53*6.35	25.4*50.8*9.53
25*55*10	25.4*36.53*7.14	25.4*51.99*6.35
25*55*11	25.4*36.53*7.95	25.4*52*7
25*55*12	25.4*38.1*4.78	25.4*52.38*9.52
25*55*7	25.4*38.1*6.35	25.4*53.98*9.53
25*55*8	25.4*38.1*7.95	25.4*57.15*9.53
25*55*9	25.4*38.1*9.53	25.4*58.75*7.95
25*58*10	25.4*38.1*9.93	25.4*61.93*9.53
25*60*10	25.4*39.7*6.35	25.4*62*9
25*60*7	25.4*39.7*7.95	25.4*63.5*7.95
25*60*8	25.4*41.28*11.13	25.5*37.5*6
25*61*8.5	25.4*41.28*6.35	25.58*50.39*6.35
25*62*10	25.4*41.28*7.95	26*32*5
25*62*12	25.4*41.28*9.53	26*33*7
25*62*15	25.4*42.88*6.35	26*34*4
25*62*6	25.4*42.88*7.95	26*35*4

SOG&H.T Standard Seal Types

SIZE d*D*H	SIZE d*D*H	SIZE d*D*H
26*35*5	26*47*5	27*40*6.5
26*35*7	26*47*6	27*40*7
26*35.5*5	26*47*7	27*40*8
26*36*5	26*47*8	27*41*10
26*36*7	26*47*9	27*41*7
26*36*8	26*48*7	27*41.28*6.35
26*37*10	26*48*8	27*41.28*7.95
26*37*6	26*49*10	27*41.28*9.53
26*37*7	26*50*10	27*42*10
26*37*7/8	26*50*7	27*42*5
26*37*8	26*52*10	27*42*7
26*37*9	26*52*6	27*42*8
26*38*5	26*52*7	27*42*9
26*38*7	26*52*7/8	27*42.86*9.53
26*38*8	26*52*8	27*43*10
26*39*5	26*52*9	27*43*6
26*40*10	26*62*9	27*43*7
26*40*6	26*72*10	27*43*8
26*40*7	26.19*41.28*7.95	27*43*9
26*40*8	26.5*37*7	27*44.45*11.13
26*40*9	26.5*47*7	27*44.45*6.35
26*42*10	26.98*41.27*7.93	27*44.45*9.53
26*42*6	26.98*42.86*7	27*45*11
26*42*7	27*35*7	27*45*6
26*42*8	27*36*6	27*45*7
26*42*9	27*36*7	27*45*8
26*43*10	27*37*10	27*45*9
26*43*5	27*37*4	27*46.43*11.13
26*43*7	27*37*5	27*47*10
26*43*8	27*37*6/6.5	27*47*5
26*44*7	27*37*7	27*47*6
26*45*10	27*38*5	27*47*7
26*45*6	27*38*6	27*47*8
26*45*7	27*38*7	27*47.63*11.13
26*45*9	27*39*10.5	27*47.63*6.35
26*46*10	27*39*7	27*47.63*9.53
26*46*8	27*39.7*6.35	27*48*8
26*47*10	27*40*10	27*49*10
26*47*12	27*40*6	27*49*7.5

SOG&H.T Standard Seal Types

SIZE d*D*H	SIZE d*D*H	SIZE d*D*H
27*50*10	28*39*7	28*47*10
27*50.8*11.51	28*39*9	28*47*5
27*50.8*12.7	28*40*10	28*47*6
27*50.8*9.53	28*40*5	28*47*7
27*52*10	28*40*6	28*47*8
27*52*12	28*40*7	28*47*9
27*52*5	28*40*8	28*48*10
27*52*8	28*40*9	28*48*11
27*52.4*11.13	28*41*7	28*48*5
27*53*7	28*41*8	28*48*6
27*54*8	28*42*10	28*48*7
27*55*8	28*42*11	28*48*8
27*62*10	28*42*5	28*49*7
27.79*44.45*9.52	28*42*6	28*50*10
27.79*47.63*6.35	28*42*7	28*50*11
27.8*38*7	28*42*8	28*50*12
27.95*56*10	28*42.5*8	28*50*6
28*34*7	28*42.9*10	28*50*7
28*35*4	28*43*10	28*50*8
28*35*5	28*43*6.5	28*50.8*10
28*35*7	28*43*7	28*52*10
28*35*9	28*43*8	28*52*12
28*36*4	28*43*9	28*52*5
28*36*5	28*43.5*6	28*52*6
28*36*6	28*44*10	28*52*7
28*36*7	28*44*11	28*52*8
28*36*8	28*44*6	28*52*9
28*37*4	28*44*7	28*54*10.5
28*37*5	28*44*8	28*54*7.5
28*37*6	28*45*10	28*55*10
28*37*7	28*45*5	28*55*7
28*37*8	28*45*6	28*55*9
28*38*10	28*45*7	28*56*10
28*38*5	28*45*8	28*56*6
28*38*5.5	28*45*9	28*56*7
28*38*6	28*46*10	28*56*8
28*38*6.5	28*46*12	28*56*9
28*38*7	28*46*6	28*57*10
28*38*8	28*46*8	28*57*7

SOG&H.T Standard Seal Types

SIZE d*D*H	SIZE d*D*H	SIZE d*D*H
28*58*10	28.58*41.28*6.35	28.58*63.5*12.7
28*58*6	28.58*41.28*7.95	28.58*64.29*6.35
28*58*7	28.58*41.28*9.53	28.58*71.83*9.53
28*58*8	28.58*42.88*6.35	28.6*39.6*4.7
28*59*10	28.58*42.88*7.95	28.6*43*6.5
28*60*10	28.58*44.45*11.13	28.8*46.5*11.2
28*62*10	28.58*44.45*6.35	29*38*6
28*62*12	28.58*44.45*7.95	29*39*5
28*62*7	28.58*44.45*9.52	29*40*6
28*70*10	28.58*44.45*9.53	29*40*7
28*72*10	28.58*45.24*12.7	29*40*8
28*72*12	28.58*45.64*6.35	29*41*5
28*72*7	28.58*46.05*9.53	29*41*6
28.17*43.26*7.95	28.58*46.43*11.13	29*41*7
28.17*50.8*7.95	28.58*46.43*9.53	29*42*8
28.17*56.36*11.91	28.58*46.84*23.01	29*43*10
28.4*45*8	28.58*47.02*7.95	29*43*7
28.5*38*6	28.58*47.63*11.13	29*43*8
28.5*39.5*8	28.58*47.63*6.35	29*44*7
28.5*39.5*9.5	28.58*47.63*7.95	29*45*7
28.5*43*7	28.58*47.63*9.53	29*45*8
28.5*45*8.5	28.58*50.39*11.13	29*45*9
28.56*48*6	28.58*50.39*6.35	29*45*9.5
28.57*41.27*7.93	28.58*50.8*11.13	29*46*10
28.57*41.27*9.52	28.58*50.8*6.35	29*46*7
28.57*44.45*11.11	28.58*50.8*9.53	29*46*9
28.57*44.45*7.93	28.58*52.4*11.51	29*47*10
28.57*50.8*9.52	28.58*52.4*12.7	29*47*8
28.57*57.15*12.7	28.58*52.4*7.95	29*48*10
28.57*57.15*9.52	28.58*52.4*9.53	29*48*7
28.58*34.92*4.78	28.58*53.97*6.35	29*48*8
28.58*34.92*6.35	28.58*53.97*7.95	29*50*10
28.58*38.1*4.78	28.58*53.97*9.53	29*50*8
28.58*38.1*6.35	28.58*57.15*6.35	29*52*10
28.58*39.7*4.78	28.58*57.15*9.53	29*52*7
28.58*39.7*6.35	28.58*61.93*11.13	29*52*9
28.58*39.7*7.95	28.58*61.93*7.95	29*55*10
28.58*39.7*9.53	28.58*61.93*9.53	29*55*9
28.58*41.28*5.5	28.58*62*9.53	29*62*10

SOG&H.T Standard Seal Types

SIZE d*D*H	SIZE d*D*H	SIZE d*D*H
29*41.5*6.5	30*42*5.5	30*46*7
29.36*38.1*4.78	30*42*5.7	30*46*7/8
29.36*39.7*5.94	30*42*6	30*46*8
29.36*42.86*8.33	30*42*7	30*46.5*7.5
29.36*42.88*6.35	30*42*7/9	30*47*10
29.36*42.88*7.95	30*42*8	30*47*4
29.36*46.43*11.13	30*42*8.5	30*47*5
29.36*47.63*6.35	30*42*9	30*47*6
29.36*50.39*6.35	30*42.5*8	30*47*7
29.36*50.8*11.13	30*43*10	30*47*8
29.36*52.4*9.53	30*43*5	30*47*8/7
29.36*53.98*9.53	30*43*5.4	30*47*9
29.5*42.5*8.15	30*43*6	30*48*10
29.5*47.9*9	30*43*6.5	30*48*7
29.6*40*7	30*43*7	30*48*8
29.77*46.43*9.53	30*43*8	30*48.5*8
29.8*47*9.9	30*43*9	30*49*7
30*36*5	30*43.5*10	30*49*8
30*37*4	30*44*10	30*49*9
30*37*6.5	30*44*5	30*50*10
30*37*8	30*44*7	30*50*11
30*38*4	30*44*8	30*50*12
30*38*5	30*44*9	30*50*12.5
30*38*6	30*44.45*10	30*50*15
30*38*7	30*44.45*7	30*50*5
30*38*8	30*44.5*10	30*50*6
30*39*7	30*45*10	30*50*7
30*40*10	30*45*11	30*50*8
30*40*4	30*45*13	30*51*10
30*40*5	30*45*5	30*51*6
30*40*6	30*45*5.5	30*51*8
30*40*7	30*45*6	30*51*9
30*40*8	30*45*7	30*52*10
30*40*9	30*45*8	30*52*11
30*41*7	30*45*9	30*52*12
30*42*10	30*45*9.5	30*52*14
30*42*12	30*45.7*6	30*52*5
30*42*4.5	30*46*10	30*52*6
30*42*5	30*46*5	30*52*7

SOG&H.T Standard Seal Types

SIZE d*D*H	SIZE d*D*H	SIZE d*D*H
30*52*8	30*62*5	30.18*44.45*4.78
30*52*8.5	30*62*6	30.18*44.45*6.35
30*52*9	30*62*7	30.18*44.45*9
30*53*13	30*62*8	30.18*44.45*9.52
30*53*8	30*62*9	30.18*46.43*11.13
30*53.5*10/14	30*65*10	30.18*47.63*6.35
30*54*10	30*65*13	30.18*47.63*7.95
30*54*10.5	30*65*5	30.18*47.63*8.89
30*54*12	30*65*7	30.18*47.63*9.53
30*54*6	30*65*8	30.18*50.39*11.13
30*54*7	30*66*12	30.18*50.8*11.13
30*54*8	30*68*10	30.18*50.8*6.35
30*54*9	30*68*7	30.18*50.8*7.14
30*55*10	30*68*8	30.18*50.8*9.53
30*55*11	30*70*10	30.18*52.4*6.35
30*55*12	30*70*7	30.18*53.97*6.35
30*55*5	30*70*8.5	30.18*53.97*9.53
30*55*6	30*72*10	30.18*57.15*6.35
30*55*7	30*72*12	30.18*57.15*7.95
30*55*8	30*72*13	30.18*61.93*6.35
30*56*10	30*72*6	30.18*61.93*9.53
30*56*12	30*72*7	30.18*62*9.53
30*56*6	30*72*8	30.18*62.18*9.53
30*56*7	30*75*10	30.18*63.5*6.35
30*56*8	30*75*9	30.18*80.98*9.53
30*57*10	30*77*9	30.56*44.45*7.95
30*57*7	30*80*10	30.56*50.4*6.35
30*57*8	30*80*7	31*41*5
30*58*10	30*82*10	31*41*7
30*58*8	30*85*10	31*42*7
30*60*10	30*90*10	31*42*8
30*60*12	30*90*7	31*43*10
30*60*7	30.16*50.8*7.93	31*43*12.5
30*60*8	30.18*41.28*6.35	31*43*6
30*62*10	30.18*42.88*7.95	31*43*7
30*62*11	30.18*42.88*9.53	31*43*8
30*62*12	30.18*43.66*12.7	31*44*7
30*62*13	30.18*43.66*9.53	31*44*8
30*62*14	30.18*44.45*11.13	31*45*6

SOG&H.T Standard Seal Types

SIZE d*D*H	SIZE d*D*H	SIZE d*D*H
31*45*7	31.75*46.43*9.53	31.75*63.5*9.53
31*45*8	31.75*47.63*11.13	31.75*68.28*7.95
31*46*6	31.75*47.63*6.35	31.75*68.28*9.53
31*46*7	31.75*47.63*7.95	31.75*69.85*9.52
31*46*8	31.75*47.63*9.53	31.75*72*9.53
31*47*10	31.75*48.03*9.53	31.75*73.02*9.53
31*47*7	31.75*49.23*11.13	31.8*47*8
31*47*8	31.75*50.19*7.95	32*40*10
31*48*10	31.75*50.39*12.7	32*40*4
31*48*7	31.75*50.39*6.35	32*40*5
31*49*7	31.75*50.39*9.93	32*40*7
31*50*8	31.75*50.8*11.13	32*40*8
31*51*7	31.75*50.8*12.7	32*42*10
31*52*12	31.75*50.8*6.35	32*42*4
31*52*6	31.75*50.8*7.93	32*42*5
31*52*7	31.75*50.8*7.95	32*42*6
31*52*8	31.75*50.8*9.53	32*42*7
31*52*9	31.75*52.38*11.13	32*42*8
31*55*9	31.75*52.38*9.53	32*42*9
31*62.5*4.5	31.75*52.4*11.13	32*42.5*5
31.5*43.2*10	31.75*52.4*6.35	32*43*10
31.5*47*7	31.75*52.4*9.53	32*43*5.5
31.5*52*7	31.75*53.97*11.13	32*43*7
31.5*72*9.5	31.75*53.97*6.35	32*44*10
31.7*42.85*4.75	31.75*53.97*7.95	32*44*11
31.75*40*7	31.75*53.97*9.53	32*44*12
31.75*41.28*4.78	31.75*55.58*11.13	32*44*6
31.75*41.28*6.35	31.75*55.58*9.53	32*44*7
31.75*42.86*6.35	31.75*57.15*12.7	32*44*8
31.75*42.86*7.95	31.75*57.15*6.35	32*44*9
31.75*42.88*11.13	31.75*57.15*7.95	32*44.45*7
31.75*42.88*7.95	31.75*57.15*9.53	32*44.45*9
31.75*42.88*9.53	31.75*59.13*11.13	32*44.57*7
31.75*44.45*12.7	31.75*60.33*12.7	32*45*10
31.75*44.45*6.35	31.75*60.33*7.95	32*45*12
31.75*44.45*7.93	31.75*60.33*9.53	32*45*5
31.75*44.45*7.95	31.75*61.93*6.35	32*45*6
31.75*44.45*9.53	31.75*61.93*7.95	32*45*6.5
31.75*44.5*6.35	31.75*62*7	32*45*7

SOG&H.T Standard Seal Types

SIZE d*D*H	SIZE d*D*H	SIZE d*D*H
32*45*8	32*54*7	32*65*9
32*46*6	32*54*8	32*66*10
32*46*7	32*55*10	32*66*8
32*46*8	32*55*11	32*67*8
32*47*10	32*55*12	32*68*10
32*47*12	32*55*7	32*68*8
32*47*6	32*55*8	32*70*10
32*47*7	32*55*8.5	32*70*8
32*47*8	32*55*9	32*72*10
32*47*9	32*56*10	32*72*8
32*48*10	32*56*11	32*74*7
32*48*12	32*56*12	32*78*10
32*48*5	32*56*8	32*80*10
32*48*7	32*57*12	32.5*46*6
32*48*8	32*57*7.5	32.5*44.5*6.5
32*48*9	32*57*9.5	32.54*49.23*12.7
32*49.5*10	32*58*10	32.54*50.8*9.53
32*50*10	32*58*12	32.94*50.8*7.95
32*50*12	32*58*7	33*43*6
32*50*6	32*58*8	33*43*7
32*50*7	32*59*10	33*43*8
32*50*8	32*59*7	33*44*8
32*51*12	32*60*10	33*45*11
32*51*8	32*60*12	33*45*6.5/8
32*51*9	32*60*7	33*45*7
32*51*9.5	32*60*8	33*45*8
32*52*10	32*62*10	33*46*10
32*52*11	32*62*12	33*47*6
32*52*12	32*62*6	33*47*7
32*52*5	32*62*7	33*47*8
32*52*6	32*62*8	33*48*10
32*52*6.5	32*64*10	33*48*12
32*52*7	32*64*7	33*48*6
32*52*7.5	32*65*10	33*48*8
32*52*8	32*65*12	33*48*8.9
32*52*9	32*65*13	33*49*8
32*53*7	32*65*6.5	33*50*10
32*54*10	32*65*7.5	33*50*11
32*54*6	32*65*8	33*50*12

SOG&H.T Standard Seal Types

SIZE d*D*H	SIZE d*D*H	SIZE d*D*H
33*50*6	33.35*57.15*9.53	34*50*7
33*50*6.5	33.35*57.94*12.7	34*50*8
33*50*8	33.35*57.94*6.35	34*51*8
33*52*10	33.35*57.96*12.7	34*52*10
33*52*6	33.35*60.33*12.7	34*52*11
33*52*7	33.35*60.33*7.95	34*52*13
33*52*8	33.35*63.5*9.53	34*52*7
33*52*8.5	33.35*71.83*9.53	34*52*7.5
33*55*10	33.73*52.4*10.31	34*52*8
33*55*12	33.73*52.4*9.53	34*53*10
33*55*9.5	33.73*58.75*11.13	34*54*10
33*56*12	34*42*8	34*54*11
33*59*12	34*43*7	34*54*12.5
33*60*10	34*44*10	34*54*6
33*62*10	34*44*6	34*54*7
33*62*8	34*44*7	34*54*8
33*63*9	34*44*8	34*54*9
33*64*10	34*45*6	34*55*10
33*66*12	34*45*7	34*55*12
33*66*13	34*45*8	34*55*6
33*72*10	34*45*9	34*55*7
33.33*73.02*9.53	34*46*5	34*55*9
33.34*57.15*9.52	34*46*6	34*56*10
33.35*44.45*4.78	34*46*7	34*56*8
33.35*44.45*9.53	34*46*8	34*57*10
33.35*46.05*8.74	34*47*10	34*57*6
33.35*46.84*4.78	34*47*12	34*58*10
33.35*47.63*11.13	34*47*7	34*58*13
33.35*47.63*6.35	34*47*8	34*58*8
33.35*47.63*7.95	34*47*9	34*59*10
33.35*49.23*6.35	34*48*10	34*60*5
33.35*49.23*9.53	34*48*11	34*62*10
33.35*50.8*7.95	34*48*7	34*62*12
33.35*50.8*9.53	34*48*8	34*62*14
33.35*52.4*12.7	34*48*9	34*62*6
33.35*52.4*15.88	34*49*7	34*62*7
33.35*52.4*7.95	34*49*8	34*62*8
33.35*52.4*9.53	34*50*10	34*70*10
33.35*53.98*9.53	34*50*12	34*72*10

SOG&H.T Standard Seal Types

SIZE d*D*H	SIZE d*D*H	SIZE d*D*H
34*72*10/12	34.92*57.15*9.52	34.93*63.5*12.7
34*72*12	34.92*57.15*9.53	34.93*63.5*9.53
34*75*10	34.92*58.75*11.13	34.93*69.85*9.53
34*80*10	34.92*59.13*10.3	34.93*73.03*7.95
34*80*12	34.92*60.33*12.7	34.93*88.9*12.7
34*83*11.5	34.92*60.33*7.95	35*100*10
34.14*47.63*7.95	34.92*60.33*9.53	35*100*12
34.5*47*7	34.92*62*7.95	35*42*10
34.5*49.3*12.5	34.92*63.5*11.13	35*42*4
34.5*52*7	34.92*63.5*12.7	35*42*7
34.52*56.74*5.94	34.92*65.1*11.13	35*42*8
34.52*57.15*12.7	34.92*65.1*12.7	35*43*4.5
34.52*57.56*11.13	34.92*66.68*9.53	35*43*6
34.59*55.65*11.89	34.92*69.85*12.7	35*43*7
34.59*55.65*6.35	34.92*72.24*7.95	35*44*7
34.9*46.4*6	34.92*72.24*9.53	35*45*10
34.92*44.45*6.35	34.92*76.2*9.53	35*45*12
34.92*46.4*6	34.93*47.63*6.35	35*45*4
34.92*47.63*11.13	34.93*47.63*7.95	35*45*5
34.92*47.63*4.78	34.93*47.63*9.53	35*45*6
34.92*47.63*6.35	34.93*49.23*9.53	35*45*7
34.92*47.63*7.95	34.93*50.8*7.95	35*45*7/9
34.92*49.23*6.35	34.93*50.8*9.53	35*45*8
34.92*50.8*11.13	34.93*52.4*12.7	35*45.2*7
34.92*50.8*12.7	34.93*52.4*7.95	35*46*6.5
34.92*50.8*7.95	34.93*52.4*9.53	35*46*7
34.92*52.38*6.35	34.93*53.98*11.13	35*47*10
34.92*52.4*11.13	34.93*53.98*6.35	35*47*12
34.92*53.97*12.7	34.93*53.98*7.95	35*47*4.5
34.92*53.97*7.93	34.93*55.56*12.7	35*47*5
34.92*53.97*7.95	34.93*57.15*11.13	35*47*6
34.92*53.97*9.52	34.93*57.15*12.7	35*47*7
34.92*53.97*9.53	34.93*57.15*6.35	35*47*7/8.5
34.92*55.58*12.7	34.93*57.15*9.53	35*47*7/9
34.92*55.58*6.35	34.93*60.33*12.7	35*47*8
34.92*57.15*12.7	34.93*60.33*7.95	35*47*9
34.92*57.15*6.35	34.93*60.33*9.53	35*47.6*7
34.92*57.15*7.93	34.93*61.93*6.35	35*48*10
34.92*57.15*7.95	34.93*61.93*9.53	35*48*11

SOG&H.T Standard Seal Types

SIZE d*D*H	SIZE d*D*H	SIZE d*D*H
35*48*12	35*52*9.5	35*60*10
35*48*15	35*52.5*6	35*60*12
35*48*6	35*53*10	35*60*15
35*48*7	35*53*7	35*60*5
35*48*8	35*53*8	35*60*7
35*48*8/10	35*54*10	35*60*8
35*48*9	35*54*7.5	35*62*10
35*49*6	35*54*8	35*62*12
35*49*7	35*55*10	35*62*5
35*49*8	35*55*11	35*62*6
35*49.5*10	35*55*12	35*62*7
35*50*10	35*55*5	35*62*8
35*50*11	35*55*7	35*62*9
35*50*12	35*55*8	35*62*9.5
35*50*4	35*55*9	35*63*7
35*50*4.5	35*55.5*9	35*64*10
35*50*5	35*56*10	35*64*12
35*50*6	35*56*12	35*64*13
35*50*7	35*56*5.8	35*64*8
35*50*8	35*56*6	35*64*9
35*50*9	35*56*7	35*65*10
35*50*9.5	35*56*8	35*65*12
35*51*10	35*56*9	35*65*13
35*51*12	35*57*10	35*65*7
35*51*8	35*57*12	35*65*8
35*51*9	35*57*6	35*65*9
35*51*9.5	35*57*7	35*67*7
35*52*10	35*57*8	35*68*10
35*52*11	35*57*9	35*68*12
35*52*12	35*58*10	35*68*6
35*52*13	35*58*11	35*68*8
35*52*15	35*58*12	35*70*10
35*52*5	35*58*13	35*70*12
35*52*6	35*58*15	35*70*8
35*52*6.5	35*58*7	35*72*10
35*52*7	35*58*7.5	35*72*12
35*52*8	35*58*8	35*72*7
35*52*8.8	35*58*9	35*72*8
35*52*9	35*59*12	35*74*10

SOG&H.T Standard Seal Types

SIZE d*D*H	SIZE d*D*H	SIZE d*D*H
35*75*10	36*49*7	36*58*8
35*75*12	36*49*9	36*60*10
35*75*15	36*50*10	36*60*7
35*75*7	36*50*6	36*60*8
35*75*8	36*50*7	36*61*12
35*76*10	36*50*8	36*62*10
35*76*9	36*50*9	36*62*12
35*78*10	36*50.8*8	36*62*7
35*78*8	36*51*8	36*65*10
35*79*10	36*52*10	36*65*12
35*80*10	36*52*5	36*65*7
35*80*12	36*52*6.3	36*68*10
35*80*13	36*52*6.5	36*75*12
35*80*7	36*52*7	36*83*12
35*80*8	36*52*8	36.07*53.98*10.87
35*82*6	36*52*9	36.5*50.5*7
35*82*7	36*53*7	36.5*80*10
35*83*12	36*53*9	36.51*63.5*12.7
35*85*10	36*54*10	36.52*63.6*12.7
35*90*10	36*54*11	36.53*47.63*6.35
35*92*12	36*54*6.5	36.53*50.8*6.35
35.53*58.22*11.7	36*54*7	36.53*50.8*7.95
35.71*50.8*7.95	36*54*7.4	36.53*50.8*9.53
35.8*68*10	36*54*7.5	36.53*51.99*7.95
36*42*6	36*54*8	36.53*52.4*12.7
36*44*5	36*55*10	36.53*52.4*7.95
36*44*8	36*55*11	36.53*53.98*6.35
36*45*6	36*55*12	36.53*53.98*7.95
36*46*4	36*55*7	36.53*53.98*9.53
36*46*6	36*56*10	36.53*54.38*7.95
36*46*7	36*56*6	36.53*55.58*12.7
36*46*8	36*56*7	36.53*57.15*7.95
36*46*9	36*56*8	36.53*57.15*9.53
36*47*7	36*56*9	36.53*58.75*6.35
36*48*10	36*57*10	36.53*58.75*9.53
36*48*12	36*57*7	36.53*59.13*6.35
36*48*7	36*57.15*6.35	36.53*60.33*12.7
36*48*8	36*58*10	36.53*60.33*7.95
36*48*8/9.5	36*58*12	36.53*60.33*9.53

SOG&H.T Standard Seal Types

SIZE d*D*H	SIZE d*D*H	SIZE d*D*H
36.53*61.93*7.95	37*62*10	38*50*6
36.53*63.5*12.7	37*62*11	38*50*7
36.53*63.5*9.53	37*62*12	38*50*8
36.53*69.85*7.95	37*62*14	38*51*7
36.53*73.02*9.53	37*62*7	38*51*7.4
36.58*54.16*7.94	37*62*8	38*51*8
36.7*76.2*9.53	37*62*9	38*52*10
37*45*10	37*64*8	38*52*6
37*47*10	37*66*7	38*52*7
37*47*7	37*66*9.5	38*52*7/8
37*47*9	37*70*13	38*52*8
37*47.5*5	37*72*12	38*52*8.5
37*47.5*5.2	37*72*7	38*52*9
37*48*5	37*76*10	38*52.2*7
37*48*6	37*80*12	38*53*10
37*49*8/9	37*80*13	38*53*7.72
37*50*10	37.31*47*10	38*53*8
37*50*6	37.31*60.33*7.95	38*54*10
37*50*7	37.31*60.33*9.53	38*54*11
37*51*8	37.46*65.05*9.53	38*54*13
37*52*10	37.5*50*6	38*54*5
37*52*12	37.6*49*7.5	38*54*6
37*52*7	38*44*8	38*54*6.5
37*52*8	38*45*10	38*54*7
37*53*7	38*45*4	38*54*8
37*54*11	38*45*5	38*55*10
37*55*11	38*45*8	38*55*12
37*55*7	38*47*10	38*55*6
37*55*8	38*47*5	38*55*7
37*55*9	38*47*7	38*55*8
37*56*9	38*47*8	38*55*9
37*57*10	38*48*10	38*55.5*9
37*57*9	38*48*6	38*56*10
37*58*13	38*48*7	38*56*10/13.5
37*58*7	38*48*8	38*56*12
37*58*8	38*50*10	38*56*7
37*60*10	38*50*11	38*56*9
37*60*12	38*50*12	38*57*10
37*61*10	38*50*5	38*57*7

SOG&H.T Standard Seal Types

SIZE d*D*H	SIZE d*D*H	SIZE d*D*H
38*57*8	38*72*11	38.1*57.15*9.53
38*57*9	38*72*12	38.1*57.2*12.7
38*58*10	38*72*8	38.1*59.13*9.53
38*58*11	38*74*10	38.1*60.32*9.52
38*58*12	38*74*11	38.1*60.33*12.7
38*58*5	38*74*8	38.1*60.33*6.35
38*58*7	38*75*10	38.1*60.33*7.95
38*58*8	38*75*5	38.1*60.33*9.53
38*58*8.5	38*80*10	38.1*60.38*12.7
38*58*9	38*80*12	38.1*61.93*9.53
38*59*8	38*80*8	38.1*63.5*11.13
38*59*9	38*90*10	38.1*63.5*12.7
38*60*10	38*90*8	38.1*63.5*6.35
38*60*12	38.1*47.63*4.78	38.1*63.5*7.14
38*60*7	38.1*47.63*6.35	38.1*63.5*7.95
38*60*8	38.1*47.63*9.53	38.1*63.5*9.53
38*62*10	38.1*49.23*6.35	38.1*63.55*7.95
38*62*10/15	38.1*49.23*9	38.1*65.05*12.7
38*62*12	38.1*50.29*7	38.1*65.1*12.7
38*62*14	38.1*50.8*12.7	38.1*66.68*12.7
38*62*6	38.1*50.8*6.35	38.1*66.68*9.53
38*62*7	38.1*50.8*7.95	38.1*68.28*12.7
38*62*8	38.1*50.8*9.53	38.1*68.66*11.89
38*62*9	38.1*52.4*11.13	38.1*69.85*12.7
38*63*9	38.1*52.4*6.35	38.1*69.85*7.95
38*64*10	38.1*52.4*7.95	38.1*69.85*9.53
38*64*12	38.1*52.4*9.53	38.1*70*12.7
38*65*10	38.1*53.97*11.13	38.1*72*7.95
38*65*12	38.1*53.97*9.53	38.1*73.02*9.53
38*65*8	38.1*53.98*11.51	38.1*76.2*9.53
38*65*9	38.1*53.98*6.35	38.5*53*8
38*66*8	38.1*53.98*7.93	38.5*58*11
38*68*10	38.1*53.98*7.95	38.5*58*8.5
38*68*12	38.1*55.56*9.52	38.89*53.19*7.95
38*68*8	38.1*55.58*7.95	38.89*60.33*9.53
38*70*10	38.1*57.15*12.7	39*50*9
38*70*12	38.1*57.15*6.35	39*50.5*7
38*70*7	38.1*57.15*7.95	39*50.5*8.5
38*72*10	38.1*57.15*9.52	39*50.55*8.5

SOG&H.T Standard Seal Types

SIZE d*D*H	SIZE d*D*H	SIZE d*D*H
39*51*7.5	39.7*57.15*9.53	40*52*10
39*52*10	39.7*58.75*11.13	40*52*4
39*52*5	39.7*58.75*7.95	40*52*4.5
39*52*7	39.7*58.75*9.52	40*52*5
39*52*8	39.7*58.75*9.53	40*52*6
39*52*9/10	39.7*60.33*12.7	40*52*7
39*54*10.5	39.7*60.33*7.95	40*52*7.5
39*54*9.5	39.7*60.33*9.53	40*52*8
39*55.5*9	39.7*61.93*11.91	40*52*9
39*56*7	39.7*61.93*7.95	40*53*5
39*58*6	39.7*62*6.35	40*53*6.5
39*60*10	39.7*63.5*12.7	40*53*7
39*60*8	39.7*63.5*7.95	40*53*8
39*62*11	39.7*63.5*9.53	40*53*8.5
39*62*7	39.7*66.68*11.13	40*54*10
39*62*9	39.7*66.68*9.53	40*54*5
39*64*9	39.7*68.28*11.13	40*54*5.5
39*65*8	39.7*68.28*9.53	40*54*7
39*65*9	39.7*69.85*9.53	40*54*8
39.3*68*10	39.7*73.02*9.53	40*55*10
39.5*52*8	39.7*76.2*9.53	40*55*12
39.5*60*10	40*100*10	40*55*5
39.6*52*7	40*100*13	40*55*6
39.68*63.5*12.7	40*47*4	40*55*6.5
39.68*63.5*7.95	40*48*4	40*55*7
39.68*63.5*9.52	40*48*5	40*55*8
39.68*68.26*9.52	40*48*6.3	40*55*9
39.7*50.8*6.35	40*48*8	40*55*9.5
39.7*52.4*6.35	40*49*10	40*56*10
39.7*52.4*6.5	40*49*10.3	40*56*12
39.7*53.97*6.35	40*50*10	40*56*6
39.7*53.97*7.95	40*50*4	40*56*7
39.7*53.97*9.53	40*50*5	40*56*8
39.7*53.98*12.7	40*50*6	40*56*9
39.7*53.98*7.95	40*50*6.5	40*57*10
39.7*55.02*9.53	40*50*7	40*57*4.5
39.7*55.58*7.95	40*50*8	40*57*7
39.7*57.15*10	40*50*9	40*57*8
39.7*57.15*7.95	40*51*6	40*57.15*10

SOG&H.T Standard Seal Types

SIZE d*D*H	SIZE d*D*H	SIZE d*D*H
40*58*10	40*64*8	40*80*10
40*58*11	40*65*10	40*80*10/7
40*58*12	40*65*12	40*80*12
40*58*15	40*65*13	40*80*13
40*58*4.5	40*65*6	40*80*7
40*58*6.5	40*65*7	40*80*8
40*58*7	40*65*8	40*82*12
40*58*8	40*65*9	40*85*10
40*58*8.5	40*66*10	40*85*11
40*58*9	40*66*11	40*85*12
40*59*5.5	40*66*7	40*88*10
40*60*10	40*67*10	40*88*6
40*60*12	40*67*7	40*90*10
40*60*13	40*67*8	40*90*12
40*60*5	40*68*10	40*90*8
40*60*7	40*68*11	40*90*9
40*60*8	40*68*12	40*95*10
40*60*9	40*68*6	40.49*61.93*11.91
40*61*12	40*68*7	40.49*70.05*7.95
40*61*8	40*68*8	40.5*54.5*7
40*62*10	40*69*9	40.5*65.5*12
40*62*11	40*70*10	40.87*60.73*9.52
40*62*11.5	40*70*12	41*51*6
40*62*12	40*70*8	41*52*10
40*62*14	40*72*10	41*52*7
40*62*5	40*72*12	41*52*8
40*62*6	40*72*6.5	41*53*7
40*62*7	40*72*7	41*53*8
40*62*8	40*72*8	41*53*8/9.5
40*62*9	40*72*9	41*54*12
40*62/72*13.5	40*74*10	41*54*7
40*63*10	40*75*10	41*55*6
40*63*6	40*75*12	41*55*7
40*63*7	40*75*5	41*55*8.5
40*63*8	40*75*7	41*55*9
40*63.65*10	40*75*8	41*55.7*9
40*64*10	40*76*9	41*56*10
40*64*12	40*78*10	41*56*6
40*64*7	40*78*8	41*56*7

SOG&H.T Standard Seal Types

SIZE d*D*H	SIZE d*D*H	SIZE d*D*H
41*56*8	41.28*61.93*12.7	42*54*6
41*56*9	41.28*61.93*7.95	42*54*7
41*60*10	41.28*61.93*9.53	42*54*7.5
41*61*10	41.28*63.5*12.7	42*55*10
41*61*9	41.28*63.5*6.35	42*55*4
41*62*10	41.28*63.5*9.53	42*55*5
41*63*6	41.28*63.55*7.95	42*55*6
41*64*10	41.28*65.1*7.95	42*55*7
41*64.5*12	41.28*65.1*9.53	42*55*8
41*65*6	41.28*66.68*12.7	42*55*9
41*65*9	41.28*66.68*7.95	42*56*10
41*65.4*12.7	41.28*66.68*9.53	42*56*5
41.27*52.38*6.98	41.28*68.28*9.53	42*56*6
41.27*55.56*9.52	41.28*69.85*12.7	42*56*7
41.27*57.15*9.52	41.28*69.85*6.35	42*56*7/9
41.27*61.91*12.7	41.28*69.85*7.95	42*56*8
41.27*61.91*9.52	41.28*69.85*9.53	42*57*10
41.27*63.5*7.93	41.28*73.02*9.53	42*57*7
41.27*66.67*12.7	41.28*73.43*10	42*57*8
41.27*66.68*9.52	41.28*76.2*12.7	42*57.15*10
41.27*73.02*12.7	41.28*76.2*6.35	42*58*10
41.27*73.02*7.93	41.28*76.2*9.53	42*58*12
41.28*50.8*12.7	41.3*66.7*9.1/10.3	42*58*13
41.28*50.8*6.35	41.7*55*10	42*58*7
41.28*50.8*9.53	41.7*55*7	42*58*8
41.28*53.97*6.35	41.75*57.15*10	42*58*9.5
41.28*53.97*7.95	42*50*6	42*60*10
41.28*53.98*6.35	42*50*7	42*60*12
41.28*53.98*9.53	42*50*8	42*60*14
41.28*57.15*6.35	42*52*10	42*60*5
41.28*57.15*7.95	42*52*4	42*60*6
41.28*57.15*9.53	42*52*5	42*60*7
41.28*58.75*11.13	42*52*6	42*60*8
41.28*60.33*11.13	42*52*7	42*60*9
41.28*60.33*12.7	42*52*8	42*62*10
41.28*60.33*6.35	42*52*9	42*62*12
41.28*60.33*7.95	42*53*7	42*62*5
41.28*60.33*9.53	42*54*10	42*62*6
41.28*61.93*11.13	42*54*5	42*62*7

SOG&H.T Standard Seal Types

SIZE d*D*H	SIZE d*D*H	SIZE d*D*H
42*62*8	42*75*8	43*54*7.5
42*62*9	42*76*10	43*55*10
42*63*7	42*76*12	43*55*10.5
42*64*10	42*78*10	43*55*6
42*64*13	42*78*8	43*55*7
42*64*7	42*80*10	43*55*7.5
42*65*10	42*80*13	43*55*8
42*65*10/12	42*80*8	43*58*12
42*65*11	42*81*13	43*58*13.5
42*65*12	42*82*10	43*58*7
42*65*7	42*85*8	43*58*8
42*65*8	42*92*13	43*59*10
42*65*9	42.06*66.62*9.7	43*59*7
42*66*10	42.06*66.68*9.53	43*59*8
42*66*7	42.06*66.68*9.93	43*60*10
42*66*8	42.06*68.28*12.7	43*60*12
42*67*10	42.06*68.28*9.53	43*60*15
42*67*12	42.5*54.5*6	43*60*6.5
42*68*10	42.8*55*11	43*60*7
42*68*10/15	42.85*59.14*7.93	43*60*7.5
42*68*11	42.87*69.85*9.53	43*60*8
42*68*12	42.88*55.58*4.78	43*61*9
42*68*8	42.88*57.15*7.93	43*62*10
42*69*10	42.88*59.13*9.53	43*62*12
42*70*10	42.88*60.33*9.53	43*62*8
42*70*12	42.88*61.93*6.35	43*63*12
42*70*8	42.88*61.93*7.95	43*63*8
42*72*10	42.88*63.5*12.7	43*63*9
42*72*12	42.88*63.5*9.53	43*64*12
42*72*6	42.88*66.68*12.7	43*65*10
42*72*7	42.88*66.68*9.53	43*65*13
42*72*8	42.88*68.28*12.7	43*65*8
42*72*9	42.88*69.85*12.7	43*66*10
42*72.5*10	42.88*69.85*9.53	43*68*11
42*72.5*12	42.88*76.2*9.53	43*68*12
42*73*13	43*53*5	43*68*8
42*74*10	43*53.57*9.53	43*70*10
42*75*10	43*54*6	43*70*12
42*75*12	43*54*7	43*70*13

SOG&H.T Standard Seal Types

SIZE d*D*H	SIZE d*D*H	SIZE d*D*H
43*72*10	44*62*7	44.45*58.75*9.53
43*72*12	44*62*8	44.45*59.13*11.13
43*73*10	44*62*9	44.45*59.13*6.35
43*73*7	44*63*7	44.45*60.32*12.7
43*75*10	44*64*8	44.45*60.32*7.93
43*75*12	44*64*9	44.45*60.33*6.35
43*75*8	44*65*10	44.45*60.33*7.95
43*80*10	44*65*11	44.45*60.33*9.52
43*92*10	44*65*12	44.45*60.33*9.53
43.26*59.13*10.31	44*65*8	44.45*61.93*7.95
43.26*78.33*12.7	44*66*13	44.45*61.93*9.52
43.5*56*7	44*67*10	44.45*61.93*9.53
43.5*65*7	44*68*10	44.45*63.5*12.7
43.66*60.33*9.53	44*68*12	44.45*63.5*6.35
43.66*63.5*7.95	44*68*12.8	44.45*63.5*7.95
44*52*5	44*68*6	44.45*63.5*9.53
44*54*4.5	44*68*8	44.45*65.08*7.93
44*54*6	44*69*11	44.45*65.09*7.95
44*54*7	44*70*10	44.45*65.1*12.7
44*54*7.5	44*70*12	44.45*65.1*9.53
44*55*7	44*70*8	44.45*66.67*9.52
44*56*7	44*72*10	44.45*66.68*12.7
44*56*8	44*72*12	44.45*66.68*7.95
44*58*10	44*72*7	44.45*66.68*9.53
44*58*7	44*72*8	44.45*68.28*12.7
44*58*8	44*73*12	44.45*68.28*9.53
44*58*9	44*80*10	44.45*69.06*11.13
44*58.4*10	44*80*12	44.45*69.06*9.53
44*60*10	44*80*13	44.45*69.1*12.7
44*60*12	44*90*10	44.45*69.85*12.7
44*60*6/7	44*92*10	44.45*69.85*7.93
44*60*7	44.45*53.97*4.75	44.45*69.85*7.95
44*60*8	44.45*53.98*4.78	44.45*69.85*9.53
44*60*9	44.45*57.15*11.13	44.45*70.15*9.52
44*61*8	44.45*57.15*12.7	44.45*71.45*9.53
44*62*10	44.45*57.15*6.35	44.45*73.02*12.7
44*62*11.5	44.45*57.15*7.95	44.45*73.02*6.35
44*62*12	44.45*57.15*9.53	44.45*73.02*9.53
44*62*5	44.45*58.75*6.35	44.45*73.03*7.95

SOG&H.T Standard Seal Types

SIZE d*D*H	SIZE d*D*H	SIZE d*D*H
44.45*76.2*12.7	45*56*7	45*62.5*12
44.45*76.2*9.52	45*56*9	45*63*10
44.45*76.2*9.53	45*57*5.5	45*63*12
44.45*77.8*12.7	45*57*7	45*63*7
44.45*79.38*9.53	45*57*9	45*63*7.5
44.45*80.16*7.95	45*58*10	45*64*12
44.45*80.98*11.13	45*58*12	45*64*12/7
44.45*80.98*12.7	45*58*4	45*64*7
44.45*80.98*9.53	45*58*7	45*64*8
44.45*84.94*9.53	45*58*8	45*64*9
44.45*85.73*12.7	45*58*9	45*64*9.5
44.5*62*10	45*59*10	45*65*10
44.5*80*10	45*59*7	45*65*12
44.73*100.23*9.53	45*59*8	45*65*5
44.85*61.26*9.53	45*59.13*10	45*65*6
45*100*10	45*60*10	45*65*7
45*100*15	45*60*12	45*65*8
45*100*8	45*60*5	45*65*9
45*115*10	45*60*5.5	45*66*10
45*120*12	45*60*6	45*66*12
45*52*4	45*60*6.5	45*75*7
45*52*5	45*60*7	45*75*8
45*52*7	45*60*7/9	45*76*10
45*52*8	45*60*8	45*76*12
45*53*8	45*60*9	45*76*8
45*54*4.5	45*61*10	45*78*10
45*54*5.5	45*61*6	45*78*12
45*54*7.5	45*61*9	45*78*13
45*55*10	45*62*10	45*78*8
45*55*12	45*62*10/12	45*80*10
45*55*4	45*62*11	45*80*12
45*55*5	45*62*12	45*80*13
45*55*6	45*62*13	45*80*13/5
45*55*6.5	45*62*15	45*80*7
45*55*7	45*62*6	45*80*8
45*55*8	45*62*7	45*82*12
45*56*10	45*62*8	45*82*8
45*56*5.5	45*62*8.5	45*85*10
45*56*6	45*62*9	45*85*12

SOG&H.T Standard Seal Types

SIZE d*D*H	SIZE d*D*H	SIZE d*D*H
45*85*13	45*70*10	46*68*8
45*85*8	45*70*11	46*70*10
45*90*10	45*70*12	46*70*12
45*90*13	45*70*13/5	46*70*8
45*90*8	45*70*14	46*72*10
45*92*10	45*70*5	46*72*7
45*95*10	45*70*7	46*73*10
45*95*8	45*72*10	46*73*7.5
45.24*100.03*9.53	45*72*12	46*78*10
45.6*56*7	45*72*13	46*80*10
45.67*69.85*7.95	45*72*7	46*80*8
45.95*59.97*9.65	45*72*8	46.03*76.2*9.53
46*55*9	45*72*9	46.05*63.5*6.35
46*56*7	45*72*9.5	46.05*63.5*9.53
46*56*9	45*73*10	46.05*66.62*7.95
46*58*7	45*73*12	46.05*66.68*9.53
46*58*8	45*74*10	46.05*68.28*12.7
46*59*12	45*74*12	46.05*68.28*9.53
46*60*10	45*75*10	46.05*69.85*12.7
46*60*7	45*75*12	46.05*69.85*7.95
46*60*8	45*75*6	46.05*73.03*9.53
45*66*6	45*75*6.35	46.05*76.2*9.53
45*66*9	46*61*6.5	46.05*80.98*9.53
45*67*10	46*62*7	46.2*80*10
45*67*12	46*62*8	46.2*80*6
45*67*7	46*62*9	46.63*76.2*12
45*67*8	46*63*6.5	47*56*7
45*68*10	46*64*10	47*58*10
45*68*11	46*64*7	47*58*6
45*68*12	46*64*8	47*58*7
45*68*13	46*64*9	47*59*6
45*68*14	46*65*10	47*60*10
45*68*7	46*65*12	47*60*6
45*68*8	46*65*13	47*60*7
45*68*9	46*65*7	47*60*8
45*68.5*10	46*65*8	47*62*12
45*69*10	46*65*9	47*62*6
45*69*12	46*68*10	47*62*7
45*69.1*12	46*68*12	47*62*8

SOG&H.T Standard Seal Types

SIZE d*D*H	SIZE d*D*H	SIZE d*D*H
47*62*9	47.62*63.5*12.7	47.63*79.38*9.53
47*63.5*12	47.62*66.67*12.7	47.63*79.78*12.7
47*64*8	47.62*66.67*9.52	47.63*79.78*9.52
47*65*10	47.62*69.85*16.66	47.63*79.78*9.53
47*65*8	47.62*69.85*7.95	47.63*80.16*14.3
47*66*6	47.62*80.96*12.7	47.63*80.9*7.14
47*67*12	47.63*57.15*4.78	47.63*80.98*12.7
47*68*10	47.63*60.33*12.7	47.63*82.55*12.7
47*68*12	47.63*60.33*6.35	47.63*85.73*11.1
47*68*13	47.63*60.33*7.95	47.63*85.73*11.91
47*68*6	47.63*60.33*9.53	47.63*88.9*12.7
47*70*10	47.63*61.11*6.35	48*55*4
47*70*12	47.63*61.93*7.95	48*58*10
47*70*8	47.63*62*8.26	48*58*4
47*70*9	47.63*63.5*12.7	48*58*7
47*72*10	47.63*63.5*6.35	48*58*8
47*72*12	47.63*63.5*7.95	48*60*10
47*72*7	47.63*63.5*9.53	48*60*12
47*72*8	47.63*65.1*7.95	48*60*7
47*72*9	47.63*66.68*11.51	48*60*8
47*75*8	47.63*66.68*7.95	48*60*9
47*77*8	47.63*66.68*9.53	48*61*8.5
47*80*10	47.63*68.28*12.7	48*61.82*6.35
47*80*12	47.63*68.28*7.95	48*62*10
47*84*10	47.63*68.28*9.53	48*62*12
47*84*12	47.63*69.85*11.13	48*62*6
47*84*8	47.63*69.85*12.7	48*62*7
47*88*10	47.63*69.85*7.95	48*62*8
47*90*8	47.63*69.85*9.53	48*62*9
47.22*66.68*9.53	47.63*71.45*9.53	48*63*10
47.22*71.45*9.53	47.63*73.02*11.91	48*63*8
47.5*60*9	47.63*73.02*12.7	48*63*9
47.5*65*10	47.63*73.02*7.95	48*64*10
47.5*65*9.5	47.63*73.02*9.53	48*64*12
47.5*70.65*9	47.63*73.03*7.95	48*64*12/7.4
47.5*71*9	47.63*76.2*12.7	48*64*14
47.6*66.8*11	47.63*76.2*7.95	48*64*8
47.6*70.6*9	47.63*76.2*9.53	48*65*10
47.62*60.32*6.35	47.63*79.38*12.7	48*65*10/12

SOG&H.T Standard Seal Types

SIZE d*D*H	SIZE d*D*H	SIZE d*D*H
48*65*12	48*76*10	49.21*76.2*14.7
48*65*14	48*76*13	49.22*61.93*6.35
48*65*15	48*78*10	49.23*107.95*9.53
48*65*7	48*80*10	49.23*61.93*6.35
48*65*8	48*80*12	49.23*62.71*7.95
48*65*9	48*80*13	49.23*63.5*12.7
48*66*10	48*80*8	49.23*63.5*7.95
48*67*10	48*82*10	49.23*63.5*9.53
48*68*10	48*82*11	49.23*65.1*7.95
48*68*12	48*82*12	49.23*66.68*12.7
48*68*7	48*82*8	49.23*66.68*6.35
48*68*8	48*85*10	49.23*66.68*7.95
48*68*9	48*85*13	49.23*68.22*12.7
48*69*10	48*85*6	49.23*68.28*12.7
48*69*10/8	48*88*10	49.23*68.28*7.95
48*70*10	48*90*10	49.23*68.28*9.53
48*70*12	48*90*12	49.23*68.28*9.53W12
48*70*14	48*90*13	49.23*69.58*9.53
48*70*7	48*90*8	49.23*69.85*9.53
48*70*8	48.41*63.5*9.53	49.23*69.85*9.93
48*70*9	48.66*63.5*9.52	49.23*69.95*9.53
48*70*9.5	48.82*65.1*7.95	49.23*73.02*6.35
48*70/77*13/18	49*62*6	49.23*73.02*7.95
48*72*10	49*65*10	49.23*76.2*12.7
48*72*12	49*65*6	49.23*76.2*7.95
48*72*15	49*65*8	49.23*76.2*9.53
48*72*7	49*68*12	49.23*79.38*12.7
48*72*8	49*68*7	49.23*89.99*12.7
48*72*8.5	49*68*9	49.61*68.28*12.7
48*72*9	49*69*8	49.99*68.22*12.7
48*72.5*10	49*70*9	50*100*10
48*72.5*12	49*70*9.5	50*100*12
48*73*7	49*72*10	50*100*13
48*73*8	49*77*18	50*110*10
48*74*10	49*92*10	50*110*10.5
48*74*11	49.21*63.5*9.52	50*110*12
48*75*10	49.21*69.85*12.7	50*115*10
48*75*12	49.21*69.85*9.52	50*120*12
48*75*8	49.21*76.2*12.7	50*57*5

SOG&H.T Standard Seal Types

SIZE d*D*H	SIZE d*D*H	SIZE d*D*H
50*58*4	50*68*14	50*75*9
50*58*4.5	50*68*7	50*76*10
50*60*10	50*68*8	50*76*12
50*60*6	50*68*9	50*76*9
50*60*7	50*68*9.5	50*76.2*9.53
50*60*8	50*69*10	50*77*8
50*60*9	50*70*10	50*78*10
50*62*10	50*70*11	50*78*12
50*62*5	50*70*12	50*78*8
50*62*6	50*70*13.5	50*80*10
50*62*7	50*70*14	50*80*12
50*62*8	50*70*6	50*80*13
50*62*9	50*70*7	50*80*14
50*63*10	50*70*7/9.5	50*80*15
50*63*6	50*70*8	50*80*6
50*63*7	50*70*9	50*80*7
50*63*8	50*72*10	50*80*8
50*64*10	50*72*12	50*81*10
50*64*13/10	50*72*14	50*81*13
50*64*8	50*72*15	50*82*10
50*65*10	50*72*6	50*82*12
50*65*12	50*72*7	50*85*10
50*65*6	50*72*8	50*85*12
50*65*7	50*72*8/10	50*85*13
50*65*8	50*72*9	50*85*8
50*65*8/9	50*72*12/16.5	50*86*10
50*65*9	50*72.5*12	50*90*10
50*66*10	50*73*10	50*90*12
50*66*11	50*73*12	50*90*13
50*66*6	50*73*8	50*90*7
50*66*7.93	50*73*9	50*90*8
50*66*8	50*74*10	50*92*10
50*67*10	50*74*9	50*95*10
50*67*11	50*75*10	50*95*7
50*67*7	50*75*12	50*98*6
50*67*9	50*75*13	50.01*66.68*9.53
50*68*10	50*75*6	50.01*68.22*12.7
50*68*11	50*75*7	50.01*69.44*9.53
50*68*12	50*75*8	50.5*62*9

SOG&H.T Standard Seal Types

SIZE d*D*H	SIZE d*D*H	SIZE d*D*H
50.8*60.33*6.35	50.8*82.55*9.53	52*66*8
50.8*63.5*6.35	50.8*85.62*11.13	52*67*10
50.8*63.5*7.95	50.8*85.73*12.7	52*68*10
50.8*63.5*9.53	50.8*85.73*9.53	52*68*12
50.8*65.1*13.5	50.8*88.9*12.7	52*68*13
50.8*65.1*7.95	50.8*92.07*12.7	52*68*13.5
50.8*66.62*7.95	50.8*92.08*11.13	52*68*7
50.8*66.67*9.52	50.8*92.08*12.7	52*68*8
50.8*66.68*9.53	51*62*7	52*68*9
50.8*68.26*9.52	51*63*8	52*69*10
50.8*68.28*11.13	51*64*7	52*70*10
50.8*68.28*12.7	51*65*7	52*70*12
50.8*68.28*8.33	51*65*9	52*70*13
50.8*68.28*9.53	51*66*7	52*70*7
50.8*68.99*11.89	51*70*11	52*70*8
50.8*69.06*11.91	51*70*12	52*70*8.5
50.8*69.85*11.13	51*72*10	52*70*9
50.8*69.85*12.7	51*72*9	52*71*9
50.8*69.85*6.35	51*76*10	52*72*10
50.8*69.85*7.95	51*76*9.5	52*72*12
50.8*69.85*9.52	51*85*12	52*72*7
50.8*69.85*9.53	51.59*80.98*6.35	52*72*8
50.8*72.24*11.91	52*100*10	52*72*9
50.8*73.02*11.91	52*100*12	52*73*10
50.8*73.02*12.7	52*60*8	52*73*9.5
50.8*73.02*9.52	52*62*10	52*74*9
50.8*73.03*7.95	52*62*7	52*75*10
50.8*73.81*7.93	52*62*8	52*75*12
50.8*76.2*12.7	52*62*9	52*75*14.7
50.8*76.2*19.05	52*63*10	52*75*15
50.8*76.2*6.35	52*63*8	52*75*6
50.8*76.2*7.95	52*63*8.5	52*75*8
50.8*76.2*9.52	52*64*9	52*75*9
50.8*76.2*9.53	52*65*10	52*76*10
50.8*77.8*9.53	52*65*12	52*76*12
50.8*79.38*12.7	52*65*8	52*76*13
50.8*79.38*9.53	52*65*9	52*78*10
50.8*80.98*12.7	52*65.5*7.5	52*78*12
50.8*82.55*12.7	52*66*7	52*78*13

SOG&H.T Standard Seal Types

SIZE d*D*H	SIZE d*D*H	SIZE d*D*H
52*78*15	53*68.2*7	53.98*68.28*7.95
52*78*9	53*70*8	53.98*69.85*7.95
52*79*10	53*72*10	53.98*69.85*9.53
52*80*10	53*72*8	53.98*72.24*7.95
52*80*12	53*75*12	53.98*73.02*6.35
52*80*13	53*76*10	53.98*73.03*12.7
52*80*8	53*76*13	53.98*73.03*9.53
52*82*12	53*78*10	53.98*77.8*12.7
52*84*10	53*78*11	53.98*79.38*11.13
52*84*14	53*79*10	53.98*79.38*12.7
52*85*10	53*80*10	53.98*80.98*11.13
52*85*12	53*80*12	53.98*80.98*12.7
52*85*13	53*80*13	53.98*82.55*9.53
52*85*8	53*82*12	53.98*85.73*12.7
52*87*13	53*90*13	53.98*85.73*9.53
52*87*15	53.5*90*6	53.98*88.9*12.7
52*87*8	53.97*66.68*4.78	53.98*90.09*12.7
52*90*10	53.97*69.85*7.93	54*64*13
52*90*13	53.97*73.02*11.13	54*64*9
52*90*8	53.97*73.02*11.91	54*65*10
52.38*73.02*9.52	53.97*73.02*6.35	54*65*13
52.38*76.2*9.52	53.97*73.02*7.95	54*65*8
52.4*66.68*7.95	53.97*73.02*9.53	54*66*7
52.4*73.02*9.53	53.97*73.03*9.53	54*67*7
52.4*76.2*11.13	53.97*76.2*12.7	54*68*10
52.4*76.2*12.7	53.97*76.2*9.53	54*68*10.5
52.4*76.2*9.53	53.97*77.8*12.7	54*68*12
52.4*80.98*11.51	53.97*79.37*9.52	54*68*8
52.4*80.98*12.7	53.97*79.38*7.95	54*70*10
52.4*80.98*9.53	53.97*79.38*9.53	54*70*12
52.4*92.07*12.7	53.97*80.98*11.91	54*70*7/9.5
53*100*13	53.97*80.98*6.35	54*70*9
53*63*10	53.97*80.98*9.53	54*72*10
53*63*8	53.97*82.55*11.13	54*72*12
53*65*10	53.97*82.55*12.7	54*72*5
53*65*5	53.97*82.55*9.52	54*72*8
53*68*10	53.97*85.73*9.53	54*72*9
53*68*13	53.97*88.9*12.7	54*72.5*9
53*68*8	53.97*92.07*12.7	54*73*10

SOG&H.T Standard Seal Types

SIZE d*D*H	SIZE d*D*H	SIZE d*D*H
54*73*12	55*120*16	55*75*16
54*73*12.3	55*63*7	55*75*7
54*73*6.5	55*65*10	55*75*8
54*73*8	55*65*5	55*75*9
54*73.1*6.3	55*65*7	55*76*10
54*74*10	55*65*8	55*76*12
54*74*8	55*66*8	55*76*8
54*75*12	55*66*8.5	55*77*10
54*75*8	55*67*10	55*77*8.5
54*76*12	55*68*10	55*77*9
54*76*13	55*68*12	55*78*10
54*76*8	55*68*8	55*78*12
54*76*9	55*68*8.5	55*78*13
54*78*10	55*68*8/10	55*78*8
54*78*12	55*68*9	55*78*9
54*78*13	55*69*5.5	55*80*10
54*80*10	55*69*8	55*80*10/12
54*80*12	55*70*10	55*80*12
54*80*13	55*70*12	55*80*13
54*80*8	55*70*6	55*80*5
54*81*12	55*70*7	55*80*6
54*82*10	55*70*8	55*80*7
54*82*11	55*70*8/11	55*80*8
54*82*13	55*70*9	55*82*10
54*85*10	55*71*10	55*82*12
54*85*15	55*72*10	55*82*8
54*85*8	55*72*12	55*82*9.35
54*90*10	55*72*13	55*85*10
54*90*13	55*72*6	55*85*12
54.76*73.02*9.53	55*72*7	55*85*13
54.76*82.55*12.7	55*72*8	55*85*14
54.97*120.24*9.53	55*72*9	55*85*8
55*100*10	55*73*10	55*88*10
55*100*12	55*73*12	55*88*12
55*100*13	55*73*13	55*88*13
55*100*16	55*73.65*11	55*90*10
55*110*10	55*74*10	55*90*12
55*110*13	55*75*10	55*90*13
55*120*12	55*75*12	55*90*8

SOG&H.T Standard Seal Types

SIZE d*D*H	SIZE d*D*H	SIZE d*D*H
55*92*11.5	56*73.15*10	57*75*7.5
55*92*9	56*74*10	57*75*9
55*95*10	56*75*12	57*76*10
55.56*73.02*9.52	56*75*7	57*76*12.5
55.56*76.2*9.52	56*75*8	57*76/85*20
55.58*72.24*7.14	56*76*11	57*77*7
55.58*73.02*11.13	56*76*9.5	57*78*12
55.58*73.02*12.7	56*78*10	57*80*12
55.58*73.02*9.53	56*78*12	57*80*13
55.58*76.2*11.13	56*78*8	57*80*8
55.58*76.2*9.53	56*80*10	57*85*10
55.58*77.8*11.13	56*80*12	57*85*12
55.58*77.8*12.7	56*80*13	57*85*13
55.58*79.38*12.7	56*80*8	57*85*15
55.58*80.98*11.13	56*82*8	57*86*13
55.58*80.98*12.7	56*85*10	57*87*15
55.58*80.98*9.53	56*85*13	57*90*10
55.58*82.55*12.7	56*85*8	57*90*13
55.58*82.55*9.53	56*86*13	57*95*10
55.58*85.32*11.13	56*86*22	57.15*101.6*12.7
55.58*85.73*12.7	56*88*10	57.15*110*10
56*100*10	56*90*10	57.15*69.85*12.7
56*100*12	56*90*13	57.15*69.85*6.35
56*110*10	56*90*8	57.15*69.85*9.53
56*65*12	57*110*10	57.15*73.02*11.13
56*65*8	57*67*5	57.15*73.02*9.52
56*66*10	57*67*6	57.15*73.02*9.53
56*68*10	57*67*7	57.15*76.2*11.13
56*69*10	57*67*9	57.15*76.2*12.7
56*70*8	57*70*10	57.15*76.2*7.95
56*70*8.5	57*70*7.5	57.15*76.2*9.5/10.7R
56*70*9	57*71*8	57.15*76.2*9.53
56*72*10	57*72*10	57.15*77.8*11.13
56*72*12	57*72*15	57.15*77.8*11.91
56*72*7	57*72*9	57.15*77.8*9.53
56*72*8	57*73*7	57.15*79.37*9.52
56*72*9	57*74*10	57.15*79.38*9.53
56*73*10	57*75*10	57.15*80.96*12.7
56*73*12.5	57*75*12	57.15*80.98*11.91

SOG&H.T Standard Seal Types

SIZE d*D*H	SIZE d*D*H	SIZE d*D*H
57.15*80.98*9.53	58*74*8	58.75*76.2*12.7
57.15*82.55*11.13	58*75*10	58.75*79.38*9.53
57.15*82.55*12.7	58*75*11	58.75*80.16*12.7
57.15*82.55*6.35	58*75*12	58.75*82.55*12.7
57.15*82.55*9.53	58*75*15	58.75*82.55*9.53
57.15*84.15*7.54	58*75*5	58.75*84.94*7.95
57.15*84.94*11.13	58*75*8	58.75*85.1*7.95
57.15*84.94*12.7	58*75*9	58.75*85.32*7.95
57.15*85.62*9.53	58*76*10	58.75*85.73*11.91
57.15*85.72*12.7	58*76*7	58.75*88.9*12.7
57.15*85.72*9.53	58*76*9	58.75*90.5*9.53
57.15*85.73*12.7	58*78*10	58.75*95.25*12.7
57.15*85.73*7.95	58*78*12	59*75*10
57.15*85.73*9.52	58*78*13	59*75*9
57.15*85.73*9.53	58*78*5.5	59*80*10
57.15*88.9*11.13	58*80*10	59*80*7
57.15*88.9*11.13/6	58*80*12	59*85*12
57.15*88.9*12.7	58*80*13	59*85*8
57.15*88.9*9.53	58*80*5	59*90*10
57.15*92.07*11.13	58*80*7	59.92*79.38*9.93
57.15*92.07*12.7	58*80*8	60*100*10
57.15*95.25*12.7	58*80*9	60*100*12
57.15*98.43*11.13	58*81.2*5	60*100*13
57.5*81*11.5	58*82*10	60*103*12
57.56*85.73*12.7	58*82*12	60*105*10
58*100*10	58*83*10	60*105*13
58*102*12	58*85*10	60*110*10
58*108*13	58*85*12	60*110*12
58*68*10	58*85*13	60*110*13
58*68*9	58*85*7	60*110*8
58*70*10	58*85*8	60*120*10
58*70*7	58*90*10	60*120*13
58*72*10	58*90*11	60*120*8
58*72*12	58*90*13	60*125*13
58*72*6	58*90*8	60*130*10
58*72*7	58*92*8	60*130*15
58*72*8	58.5*100*8	60*70*10
58*72*9	58.7*85.09*7.94	60*70*7
58*74*10	58.73*79.37*9.52	60*70*8

SOG&H.T Standard Seal Types

SIZE d*D*H	SIZE d*D*H	SIZE d*D*H
60*72*10	60*82*12	60.32*85.72*12.7
60*72*12	60*82*13	60.32*85.73*12.7
60*72*6	60*82*6	60.32*88.9*11.11
60*72*7	60*82*7	60.32*88.9*12.7
60*72*7.5	60*82*8	60.32*90.09*11.91
60*72*8	60*82*9	60.32*90.09*12.7
60*72*8.5	60*83*13	60.32*98.42*11.1
60*72*9	60*83.5*11	60.33*73.02*7.95
60*73*10	60*85*10	60.33*76.2*11
60*74*10	60*85*11	60.33*76.2*12.7
60*74*8	60*85*12	60.33*76.2*9.53
60*75*10	60*85*13	60.33*77.8*9.53
60*75*12	60*85*6	60.33*79.38*9.53
60*75*6.5	60*85*8	60.33*80.98*9.53
60*75*7	60*86*13	60.33*82.55*12.7
60*75*8	60*86.5*10	60.33*82.55*9.53
60*75*9	60*88*10	60.33*84.94*11.13
60*76*10	60*88*12	60.33*84.94*9.53
60*76*8	60*89*11	60.33*85.73*12.7
60*76*9	60*90*10	60.33*85.73*9.53
60*77*12	60*90*11	60.33*88.9*11.13
60*77*6	60*90*12	60.33*88.9*12.7
60*78*10	60*90*13	60.33*88.9*9.53
60*78*12	60*90*16	60.33*90.09*9.53
60*78*13	60*90*6	60.33*92.07*11.13
60*78*7	60*90*8	60.33*92.07*9.53
60*78*8	60*91.5*10	60.33*95.25*12.7
60*78*9	60*92*11	61*75*8
60*79*11	60*93*10	61*76*12
60*79*8	60*93*13	61*80*12
60*80*10	60*95*10	61*80*13
60*80*12	60*95*12	61*85*13
60*80*13	60*95*13	61.52*86.92*12.7
60*80*5	60*95*8	61.93*79.38*8.74
60*80*6	60*96*13	61.93*79.38*9.53
60*80*7	60.3*79.38*10.3/12.3	61.93*82.55*9.53
60*80*8	60.3*79.38*12.3/14.3	61.93*85.09*9.53
60*80*9	60.32*79.37*12.7	61.93*85.73*12.7
60*82*10	60.32*79.37*9.52	61.93*88.9*12.7

SOG&H.T Standard Seal Types

SIZE d*D*H	SIZE d*D*H	SIZE d*D*H
61.93*88.9*9.53	62*85*8	63*85*13
61.93*95.25*9.53	62*85*8/10	63*85*8
62*100*10	62*85*9	63*88*10
62*100*12	62*88*12	63*88*12
62*100*13	62*89*12	63*90*10
62*110*10	62*90*10	63*90*12
62*110*12	62*90*11	63*90*13
62*110*13	62*90*12	63*90*7
62*120*12	62*90*13	63*95*14
62*120*13	62*92*12	63.5*101.6*11.91
62*72*10	62*93*10	63.5*101.6*12.7
62*72*9	62*93*12	63.5*101.6*9.53
62*75*10	62*93*13	63.5*76.2*6.35
62*75*12	62*95*10	63.5*76.2*7.93
62*75*6	62*95*13	63.5*76.2*9.53
62*75*8	63*100*10	63.5*79.38*6.35
62*76*10	63*100*12	63.5*79.38*9.53
62*76*9	63*100*13	63.5*80.16*7.95
62*77*9	63*110*12	63.5*80.96*9.52
62*78*10	63*110*13	63.5*80.98*11.13
62*78*8	63*75*5	63.5*80.98*9.53
62*80*10	63*75*6	63.5*82.55*11.13
62*80*11	63*75*9	63.5*82.55*12.7
62*80*12	63*78*8	63.5*82.55*6.35
62*80*8	63*78*9	63.5*82.55*9.53
62*80*9	63*80*10	63.5*84.94*11.91
62*81*6	63*80*11	63.5*84.94*7.95
62*82*10	63*80*12	63.5*85*10
62*82*12	63*80*13	63.5*85*12
62*82*8	63*80*7.7	63.5*85.72*12.7
62*83*12	63*80*8	63.5*85.73*12.7
62*83*15	63*80*9	63.5*85.73*7.95
62*83*7	63*82*10	63.5*85.73*9.53
62*83*9	63*82*9	63.5*88.9*11.13
62*84*8	63*83*11	63.5*88.9*11.29
62*85*10	63*83*12	63.5*88.9*12.7
62*85*12	63*83*9.5	63.5*88.9*15.88
62*85*12.5	63*85*10	63.5*88.9*6.35
62*85*13	63*85*12	63.5*88.9*7.95

SOG&H.T Standard Seal Types

SIZE d*D*H	SIZE d*D*H	SIZE d*D*H
63.5*88.9*9.52	65*100*10	65*80*8
63.5*88.9*9.53	65*100*12	65*80*9
63.5*90*12.5	65*100*13	65*81*13
63.5*90*13	65*100*15	65*82*10
63.5*90.09*11.13	65*100*6	65*82*12
63.5*90.09*11.91	65*100*8	65*82*8
63.5*90.09*12.7	65*100*9.5	65*82*9
63.5*92.07*12.7	65*102*13	65*83*10
63.5*92.08*9.53	65*105*10	65*83*9
63.5*95.25*11.13	65*105*12	65*84*9
63.5*95.25*12.7	65*110*10	65*85*10
63.5*95.25*9.53	65*110*12	65*85*12
63.5*98.43*11.91	65*110*13	65*85*13
63.5*98.43*6.35	65*114*10	65*85*16
64*100*13	65*115*10	65*85*5
64*120*12	65*115*12	65*85*8
64*74*10	65*115*13	65*85*9
64*80*10	65*115*15	65*86*10
64*80*13	65*120*10	65*86*12
64*80*7	65*120*12	65*88*10
64*80*8	65*120*13	65*88*12
64*82*7	65*120*8	65*88*8
64*82*8	65*125*12	65*89*12.5
64*85*10	65*130*12	65*90*10
64*85*12	65*134*14	65*90*12
64*85*13	65*140*10	65*90*13
64*85*16	65*140*12	65*90*15
64*85*8	65*75*10	65*90*7
64*88*12	65*75*5	65*90*8
64*88*6	65*75*6	65*92*10
64*88*8	65*75*7	65*92*12
64*90*10	65*75*8	65*92*13
64*90*12	65*77*8.5	65*92*14
64*90*13	65*80*10	65*95*10
64*90*9	65*80*11	65*95*12
64*95*10	65*80*12	65*95*13
64.29*120.24*9.53	65*80*13	65*95*14
64.29*82.55*9.53	65*80*5	65*95*8
64.8*103.07*11.43	65*80*7	65*98*12

SOG&H.T Standard Seal Types

SIZE d*D*H	SIZE d*D*H	SIZE d*D*H
65.08*85.72*9.52	66.68*92.07*12.7	68*88*8
65.1*79.38*9.53	66.68*92.07*9.53	68*88*9
65.1*85.73*9.53	66.68*93.68*12.7	68*88*9.5
65.1*88.9*12.7	66.68*95.25*11.13	68*88.2*8
65.1*90.09*9.53	66.68*95.25*12.7	68*90*10
65.1*92.02*11.13	66.68*95.25*9.53	68*90*12
65.1*92.07*12.7	66.68*98.43*11.89	68*90*13
65.1*95.25*12.7	66.68*98.43*12.7	68*90*14
65.89*88.9*12.7	67*100*13	68*90*7
66*80*10	67*80*10	68*90*8
66*80*9	67*80*6.7	68*92*10
66*85*10	67*82*7	68*92*12
66*85*8/10	67*85*10	68*94*8
66*90*10	67*85*8	68*95*10
66*90*13	67*90*13	68*95*12
66*90*8	67*95*13	68*95*13
66*92*11	68*100*10	68*98*10
66.67*85.62*9.52	68*100*12	68.28*101.6*12.7
66.67*85.72*9.52	68*100*13	68.28*88.9*12.7
66.67*88.9*12.7	68*110*10	68.28*88.9*9.53
66.67*92.07*12.7	68*110*13	68.28*95.25*12.7
66.68*101.6*12.7	68*115*13	69*85*10
66.68*101.6*9.53	68*120*7	69*85*8
66.68*110.91*11.13	68*78*7	69*90*10
66.68*82.55*9.53	68*80*10	69.85*101.6*12.7
66.68*84.94*12.7	68*80*7	69.85*101.68*11.13
66.68*85.59*12.7	68*80*8	69.85*101.68*9.53
66.68*85.72*12.7	68*82*10	69.85*104.78*11.13
66.68*85.73*7.95	68*82*7	69.85*104.78*12.7
66.68*85.73*9.53	68*83*10	69.85*107.95*12.7
66.68*88.9*11.13	68*85*10	69.85*114.3*12.7
66.68*88.9*12.7	68*85*12	69.85*117.48*10.31
66.68*88.9*9.53	68*85*13	69.85*82.55*6.35
66.68*90.09*11.13	68*85*8	69.85*85.73*12.7
66.68*90.09*11.91	68*86*10	69.85*85.73*7.95
66.68*90.09*12.7	68*86*8	69.85*88.9*11.13
66.68*90.09*7.95	68*87*8	69.85*88.9*12.7
66.68*92.07*11.13	68*88*10	69.85*88.9*6.35
66.68*92.07*11.91	68*88*12	69.85*88.9*9.52

SOG&H.T Standard Seal Types

SIZE d*D*H	SIZE d*D*H	SIZE d*D*H
69.85*88.9*9.53	70*115*13	70*88*9
69.85*90.09*12.7	70*115*15	70*89*12
69.85*92.07*11.13	70*120*10	70*90*10
69.85*92.07*12.7	70*120*12	70*90*11
69.85*95.25*11.13	70*120*13	70*90*12
69.85*95.25*12.7	70*120*14	70*90*13
69.85*95.25*15.88	70*125*10	70*90*13.5
69.85*95.25*7.95	70*125*12	70*90*15
69.85*95.25*9.52	70*130*10	70*90*5
69.85*95.25*9.53	70*130*12	70*90*6
69.85*98.42*11.91	70*135*12	70*90*7
69.85*98.42*12.7	70*140*12	70*90*8
69.85*98.43*11.13	70*150*12	70*92*10
69.85*98.43*12.7	70*80*10	70*92*12
69.85*98.45*9.52	70*80*12	70*92*13
70*100*10	70*80*6	70*92*8.5
70*100*12	70*80*8	70*92*9
70*100*13	70*81.5*6.5	70*93*12
70*100*14	70*82*12	70*94*10
70*100*15	70*84*8	70*94*12
70*100*16	70*85*10	70*94*8/10
70*100*6	70*85*12	70*95*10
70*100*8	70*85*13	70*95*12
70*102*12.5	70*85*15	70*95*13
70*102*13	70*85*5	70*95*14
70*102*15	70*85*6	70*95*8
70*105*10	70*85*7	70*96*13
70*105*12	70*85*8	70*97*10
70*105*13	70*85*8/9	70*98*13
70*105*15	70*85*9	71*112*9.5
70*106*14	70*86*10	71*88*10
70*110*10	70*86*12	71*88*8
70*110*12	70*86*8	71.45*101.6*12.7
70*110*13	70*86*8.5	71.45*101.6*9.53
70*110*14	70*87*10	71.45*90.5*15.09
70*110*8	70*87*8.5	71.45*92.08*9.53
70*112*12	70*88*10	71.45*95.25*12.7
70*112*13	70*88*12	71.45*98.43*11.91
70*115*10	70*88*8	71.81*86.05*7

SOG&H.T Standard Seal Types

SIZE d*D*H	SIZE d*D*H	SIZE d*D*H
71.83*95.66*7.14	73*90*7	74*95*13
72*100*10	73*93*13	74*95*7
72*100*12	73*95*10	74*96*12
72*100*13	73*96*9	74*96*9
72*102*12	73.02*100.03*9.53	74*97*12
72*105*10	73.02*101.6*12.7	74*98*10
72*105*13	73.02*101.6*15.47	74*98*12
72*105*13/10	73.02*101.6*9.53	74.2*114.65*12.7
72*110*12	73.02*85.73*4.78	74.61*101.6*15.87
72*110*13	73.02*88.9*7.95	74.61*95.25*9.52
72*120*12	73.02*92.07*7.95	74.63*100.03*12.7
72*125*12	73.02*92.07*9.52	74.63*101.6*11.91
72*130*10	73.02*92.07*9.53	74.63*101.6*12.7
72*130*12	73.02*95.25*12.7	74.63*101.6*15.88
72*140*12	73.02*95.25*4.78	74.63*104.78*14.3
72*180*12	73.02*98.42*11.11	74.63*114.3*11.91
72*82*6	73.02*98.43*12.7	74.63*92.07*9.53
72*84*7	73.03*101.6*12.7	74.63*95.25*9.53
72*85*10	73.03*101.6*17.48	74.63*98.43*12.7
72*85*8	73.03*104.78*9.53	75*100*10
72*86*7	73.03*95.25*9.53	75*100*12
72*88*8	73.5*89*8.5	75*100*13
72*90*10	74*100*10	75*100*15
72*90*12	74*100*13	75*100*17
72*90*13	74*102*13	75*100*7
72*90*8	74*104*10	75*100*8.5
72*92*12	74*105*12	75*101*12
72*94*10	74*88*12	75*102*10
72*94*12	74*88*8	75*102*12
72*95*10	74*89*12	75*102*13
72*95*12	74*90*10	75*105*10
72*95*13	74*90*10/8	75*105*12
72*96*9	74*90*12	75*105*13
72.21*100.05*12.57	74*90*13	75*105*15
73*100*10	74*90*8	75*106*10
73*100*13	74*93*10	75*106*13
73*104*7	74*93*12	75*106*6
73*112*12	74*94*10	75*107*10
73*90*10	74*95*10	75*108*10

SOG&H.T

Standard Seal Types

SIZE d*D*H	SIZE d*D*H	SIZE d*D*H
75*110*10	75*95*14	76.2*114.3*12.7
75*110*12	75*95*5	76.2*114.3*15.88
75*110*13	75*95*7	76.2*120.65*12.7
75*110*8	75*95*8	76.2*85.73*4.95
75*112*12	75*95*9	76.2*88.9*6.35
75*115*10	75*96*11	76.2*88.9*9.53
75*115*12	75*98*12	76.2*95.25*11.13
75*115*13	76*100*10	76.2*95.25*12.7
75*115*8	76*100*12	76.2*95.25*7.95
75*115*9.5	76*102*11	76.2*95.25*9.53
75*120*10	76*102*12	76.2*98.43*12.7
75*120*12	76*105*12	76.2*98.43*9.53
75*120*13	76*105*13	77*100*10
75*121*13	76*110*13	77*100*11.5
75*122*12	76*121*14	77*95*10
75*125*12	76*90*10	77*95.5*9.5
75*130*10	76*93*10	77*98*10
75*130*12	76*94*12	77.77*103.89*13.16
75*130*13	76*94*8.5	77.8*104.78*12.7
75*135*13	76*95*10	77.8*107.95*12.7
75*85*10	76*96*12	77.8*95.25*11.13
75*85*6	76*98*12	77.8*95.25*12.7
75*90*10	76.2*101.6*11.11	78*100*10
75*90*11.5	76.2*101.6*11.13	78*100*12
75*90*12	76.2*101.6*11.91	78*100*13
75*90*13	76.2*101.6*12.7	78*105*10
75*90*7	76.2*101.6*9.53	78*105*13
75*90*8	76.2*101.68*11.13	78*110*10
75*92*12	76.2*104.78*11.13	78*110*11
75*92*6	76.2*104.78*11.91	78*110*12
75*92*7	76.2*104.78*12.7	78*110*13
75*93*9	76.2*104.78*14.3	78*110*8.5
75*94*10	76.2*105.97*12.7	78*113*13
75*94*12	76.2*107.95*11.13	78*115*10
75*94*8.1	76.2*107.95*12.7	78*115*13
75*95*10	76.2*107.95*15.88	78*120*7
75*95*10/12	76.2*110*12.7	78*125*10
75*95*12	76.2*111.13*15.88	78*136*16
75*95*13	76.2*114.3*11.13	78*90*8

SOG&H.T Standard Seal Types

SIZE d*D*H	SIZE d*D*H	SIZE d*D*H
78*95*11	80*105*12	80*160*12
78*95*13	80*105*13	80*170*13
78*95*8	80*105*14	80*90*10
78*98*12	80*105*15	80*90*6
78*98*5	80*105*8	80*90*7
79*110*12	80*105*8.5	80*90*8
79*120*13	80*108*15	80*95*10
79.37*101.6*11.11	80*110*10	80*95*12
79.37*104.77*12.7	80*110*12	80*95*13
79.37*107.95*12.7	80*110*13	80*95*8
79.38*101.6*12.7	80*110*14	80*96*8
79.38*101.6*9.53	80*110*15	80*96*9
79.38*104.78*12.7	80*112*12	80*98*10
79.38*105.97*7.54	80*112*12.5	80*98*13
79.38*107.95*12.7	80*112*13	80*99*7
79.38*107.95*15.88	80*113*12	80.96*117.47*18.25
79.38*107.95*9.53	80*114*10	80.96*120.65*12.7
79.38*111.13*12.7	80*115*10	80.98*107.95*12.7
79.38*114.3*12.7	80*115*12	80.98*107.95*15.88
79.38*114.3*15.88	80*115*13	80.98*107.95*7.95
79.38*114.71*12.7	80*115*15	80.98*114.3*11.89
79.38*120.65*12.7	80*120*10	80.98*114.3*11.91
79.38*95.25*11	80*120*12	80.98*114.3*12.7
79.38*98.43*12.7	80*120*13	80.98*114.3*15.88
79.38*98.43*6.35	80*125*10	80.98*117.48*11.13
79.38*98.43*7.95	80*125*12	81*100*10
80*100*10	80*125*13	81*100*13
80*100*11	80*125*14	81*105*11
80*100*12	80*125*8	82*100*12
80*100*13	80*130*12	82*100*8
80*100*14	80*130*13	82*102*12
80*100*15	80*135*12	82*102*13
80*100*18	80*140*12	82*104*6
80*100*7	80*140*13	82*105*10
80*100*8	80*145*13	82*105*10/12
80*100*8.5	80*150*12	82*105*12
80*100*9	80*150*14	82*105*13
80*102*13	80*150*15	82*105*14
80*105*10	80*150.5*13	82*108*12

SOG&H.T Standard Seal Types

SIZE d*D*H	SIZE d*D*H	SIZE d*D*H
82*110*12	84*100*13	85*105*8
82*110*13	84*102*13	85*105*8.5
82*114.65*13	84*104*10	85*105*9
82*120*12	84*104*11	85*108*10
82*120*13	84*104*12	85*108*14
82*125*12	84*104*8.5	85*109*9
82*130*10	84*105*12	85*110*10
82*160*13	84*105*13	85*110*12
82.55*101.6*12.7	84*110*10	85*110*12/14
82.55*101.6*9.53	84*110*12	85*110*13
82.55*104.78*12.7	84*110*13	85*110*15
82.55*107.95*11.13	84*110*13.5	85*110*16
82.55*107.95*11.91	84*127*13	85*110*7
82.55*107.95*12.7	84.15*104.78*11.13	85*110*9
82.55*107.95*15.88	84.15*111.13*12.7	85*111*10
82.55*107.95*7.95	84.15*114.3*11.91	85*114*13
82.55*107.95*9.53	84.15*114.3*12.7	85*115*10
82.55*111.13*12.7	84.15*114.3*15.88	85*115*12
82.55*111.13*9.53	84.15*119.86*11.13	85*115*13
82.55*114.3*11.13	84.15*120.65*12.7	85*115*15
82.55*114.3*12.7	84.15*127*12.7	85*115*16
82.55*114.3*14.3	84.53*107.95*12.7	85*117.55*12
82.55*114.3*15.88	84.94*114.65*12.7	85*120*10
82.55*117.48*11.13	85*100*10	85*120*12
82.55*117.48*12.7	85*100*12	85*120*13
82.55*120.65*11.91	85*100*13	85*120*14
82.55*120.65*12.7	85*100*6	85*120*15
82.55*120.65*9.53	85*100*7	85*120*17
82.55*127*12.7	85*100*8	85*120*8
82.55*133.35*12.7	85*100*9	85*125*12
82.55*98.42*12.7	85*102*13	85*125*13
83*100*13	85*102*9	85*125*14
83*100*8	85*103*8	85*125*7
83*100*9	85*104*7	85*126*13
83*105*12	85*104*8.5	85*130*10
83*110*12	85*105*10	85*130*12
83*110*13	85*105*12	85*130*13
83*142*13	85*105*13	85*130*14
84*100*10	85*105*6	85*130*15

SOG&H.T Standard Seal Types

SIZE d*D*H	SIZE d*D*H	SIZE d*D*H
85*130*22	86*110*13	88*160*13
85*130*6	86*125*13	88.89*114.3*12.7
85*135*12	87*100*8	88.9*101.6*7.95
85*135*13	87*105*9	88.9*104.78*12.7
85*140*10	87*110*13	88.9*104.78*7.95
85*140*12	87*114.65*13	88.9*104.78*9.53
85*140*13	87.31*114.3*12.7	88.9*107.95*12.7
85*140*14	87.33*107.95*15.88	88.9*111.12*9.52
85*150*12	87.33*107.95*9.53	88.9*111.13*12.7
85*150*13	87.33*114.3*11.13	88.9*111.13*9.53
85*160*13	87.33*114.3*12.7	88.9*114.3*11.13
85.72*101.6*12.7	87.33*114.3*15.88	88.9*114.3*11.89
85.72*111.12*12.7	87.33*114.3*9.53	88.9*114.3*11.91
85.72*111.12*9.52	87.33*117.48*12.29	88.9*114.3*12.7
85.72*114.3*12.7	87.33*117.48*12.7	88.9*114.3*14.68
85.72*117.47*12.7	87.33*117.48*9.53	88.9*114.3*15.87
85.72*133.35*12.7	87.33*120.65*12.7	88.9*114.3*15.88
85.73*101.6*9.53	87.33*120.65*14.3	88.9*114.3*6.35
85.73*104.78*9.53	88*100*13	88.9*114.3*9.53
85.73*107.95*12.7	88*105*12	88.9*117.48*12.7
85.73*111.13*12.7	88*105*13	88.9*120.65*12.7
85.73*114.3*12.7	88*106*10	88.9*120.65*14.28
85.73*114.3*14.3	88*106*8.5	88.9*120.65*15.87
85.73*114.3*15.88	88*106*9	88.9*120.65*15.88
85.73*117.48*11.13	88*108*11	88.9*123.04*22.23
85.73*117.48*12.7	88*110*10	88.9*127*11.91
85.73*117.48*9.53	88*110*12	88.9*127*12.7
85.73*120.65*12.7	88*110*13	88.9*133.35*11.13
85.73*123.82*12.7	88*113*8	88.9*133.35*15.88
85.73*127*11.91	88*115*12	88.9*136.52*12.7
85.73*127*12.7	88*115*13	88.9*139.7*12.7
85.73*98.43*9.53	88*115*9	89*105*10
86*100*10	88*120*12	89*105*9.5
86*100*7	88*120*13	89*105.5*8
86*100*9	88*125*13	89*109*10.3
86*103*8	88*126*12	89*120*13
86*105*10	88*128*12	90*100*10
86*105*13	88*140*13	90*100*12
86*106*8	88*150.5*13	90*100*13

SOG&H.T Standard Seal Types

SIZE d*D*H	SIZE d*D*H	SIZE d*D*H
90*100*8	90*125*12	92*120*14
90*102.8*6.5	90*125*13	92*125*12
90*104*10	90*125*15	92*125*13
90*104*11	90*125*16	92.07*111.13*11.13
90*105*10	90*130*10	92.07*111.13*9.53
90*105*12	90*130*12	92.07*114.3*12.7
90*105*13	90*130*13	92.07*114.3*9.53
90*105*6	90*130*15	92.07*117.07*15.88
90*105*7	90*135*12	92.07*117.47*12.7
90*105*8	90*135*13	92.07*117.48*12.7
90*110*10	90*135*15	92.07*117.48*15.88
90*110*11	90*140*10	92.07*120.65*12.7
90*110*12	90*140*11	92.07*123.82*11.13
90*110*13	90*140*12	92.07*127*11.91
90*110*15	90*140*13	92.07*127*12.7
90*110*16	90*145*12	92.08*111.13*9.53
90*110*7	90*150*12	92.08*114.3*12.7
90*110*7.5	90*160*12	92.08*120.65*12.7
90*110*8	90*160*15	92.08*123.83*9.53
90*110*9	90*165*13	92.08*133.35*15.88
90*112*12	90*170*12	93*108*7
90*112.7*13	90*180*14	93*113*13
90*114*12	90.5*114.3*11.89	93*115*13
90*115*10	90.5*120.65*12.7	93*120*13
90*115*12	90.5*127*12.7	93*130*13
90*115*13	91*111*10	93.65*142.88*12.7
90*115*15	91*111*9	93.68*120.65*12.7
90*115*8	91*114*9	93.68*123.82*12.7
90*115*9	92*105*10	93.68*130.17*12.7
90*117.5*12.5	92*110*10	93.68*133.35*11.91
90*118*12	92*110*12	94*114*7
90*118*13	92*110*13	94*120*10
90*120*10	92*110*8.5	94*120*13
90*120*12	92*110*9	95*105*5
90*120*13	92*112*10	95*110*10
90*120*15	92*115*13	95*110*11
90*120*8	92*120*10	95*110*12
90*122*12.5	92*120*12	95*110*13
90*125*10	92*120*13	95*110*6

SOG&H.T Standard Seal Types

SIZE d*D*H	SIZE d*D*H	SIZE d*D*H
95*110*7	95*140*13	97*120*13
95*110*9	95*140*8	97*124.13*13
95*112*12	95*145*10	97*130*13
95*112*12.5	95*145*13	98*110*13
95*115*10	95*145*8	98*114*12
95*115*11	95*160*13	98*114*8
95*115*12	95*160*15	98*115*13
95*115*13	95*170*13	98*116*10
95*115*15	95*170*14	98*120*12
95*115*8	95*170*15	98*120*13
95*115*8.5	95.25*107.95*12.7	98*120*7
95*115*9.5/12	95.25*114.28*11.89	98*124*13
95*117*12	95.25*114.3*11.91	98*125*12
95*118*10	95.25*114.3*12.7	98*125*13
95*118*12	95.25*114.3*7.95	98*128*10
95*118*13	95.25*114.3*9.53	98*130*13
95*120*12	95.25*117.48*12.7	98*135*14
95*120*13	95.25*120.65*11.13	98.42*127*12.7
95*120*15	95.25*120.65*12.7	98.43*119.2*9.53
95*120*7	95.25*120.65*9.53	98.43*120.65*12.7
95*120*8	95.25*123.82*12.7	98.43*120.65*9.53
95*125*10	95.25*123.82*15.88	98.43*123.82*12.7
95*125*12	95.25*127*11.13	98.43*123.83*12.7
95*125*13	95.25*127*12.7	98.43*127*12.7
95*125*15	95.25*127*9.53	98.43*130.17*12.7
95*125*16	95.25*130.17*11.91	98.43*133.35*15.88
95*127*12	95.25*133.35*12.7	98.43*136.53*12.7
95*128*12	95.25*133.35*15.88	98.43*139.7*12.7
95*130*10	95.25*136.52*11.11	98.43*144.48*12.7
95*130*12	96*112*10	98.43*144.48*19.05
95*130*13	96*114*12	99.82*127*12.7
95*130*15	96*117*10	100*110*10
95*132*12	96*120*11	100*110*12
95*135*13	96*120*12	100*110*5
95*135*14	96*136*12	100*112*9
95*135*15	96*145*13	100*114*10
95*136*13	96.82*123.82*12.7	100*114*12
95*136.5*18	96.85*114.3*6.35	100*114*7
95*140*12	97*114*12	100*115*10

SOG&H.T Standard Seal Types

SIZE d*D*H	SIZE d*D*H	SIZE d*D*H
100*115*12	100*132*12.5	101.6*120.65*12.7
100*115*13	100*132*13	101.6*123.82*14.3
100*115*7	100*134*10	101.6*123.83*15.88
100*115*8	100*135*10	101.6*127*11.13
100*115*9	100*135*12	101.6*127*11.89
100*118*10	100*135*12/13	101.6*127*11.91
100*118*12	100*135*13	101.6*127*12.7
100*118*9	100*135*14	101.6*127*13.5
100*120*10	100*135*15	101.6*127*15.88
100*120*11	100*137*11	101.6*127*7.95
100*120*12	100*140*10	101.6*127*9.52
100*120*13	100*140*12	101.6*127*9.53
100*120*14	100*140*13	101.6*130.17*14.29
100*120*15	100*140*14	101.6*130.17*14.3
100*120*17	100*140*15	101.6*130.18*12.7
100*120*6.5	100*145*12	101.6*133.35*12.7
100*120*7	100*145*13	101.6*133.35*15.88
100*120*7.5	100*150*10	101.6*136.53*12.7
100*120*8	100*150*12	101.6*139.7*12.7
100*122*13	100*150*12.7	101.6*139.7*14.3
100*124*8	100*150*13	101.6*141.68*11.13
100*125*10	100*150*15	101.6*142.88*12.7
100*125*12	100*152*15	101.6*142.88*9.53
100*125*13	100*155*8	101.6*146.05*14.3
100*125*14	100*160*12	101.6*152.4*12.7
100*125*15	100*160*13	101.6*152.4*15.88
100*125*8	100*160*14	102*116*14
100*127*10	100*170*15	102*120*12
100*127*12	100*180*12	102*125*13
100*127*12.7	100*180*13	102*130*13
100*127*13	100*180*14	102*132*13
100*130*10	100*185*13	102*135*13
100*130*12	100*190*15	103*122*10
100*130*13	100.03*127*12.7	103*125*13
100*130*14	100.03*133.35*11.13	103*140*12
100*130*15	100.03*136.53*12.7	103.19*130.17*12.7
100*130*16	101*114*10	104*120*10
100*130*7	101.6*114.3*12.7	104*120*13
100*130*8	101.6*114.3*6.35	104*125*10

SOG&H.T Standard Seal Types

SIZE d*D*H	SIZE d*D*H	SIZE d*D*H
104*130*13	105*135*16	107.95*136.52*12.7
104*139*13	105*136*13	107.95*136.53*12.7
104.78*127*11.13	105*138*12	107.95*139.7*12.7
104.78*127*12.7	105*140*10	107.95*139.7*14.3
104.78*127*14.3	105*140*12	107.95*139.7*19.05
104.78*130.18*12.7	105*140*13	107.95*142.88*11.13
104.78*133.35*12.7	105*140*14	107.95*142.88*12.7
104.78*136.53*12.7	105*140*15	107.95*146.05*11.13
104.78*136.53*15.88	105*140*16	107.95*146.05*12.7
104.78*139.7*12.7	105*140/148*11/21.5	107.95*146.05*14.29
105*120*10	105*145*12	107.95*152.4*12.7
105*120*11	105*145*13	107.95*152.4*14.3
105*120*13	105*145*15	108*123*11
105*120*15	105*145*16	108*130*12
105*120*7	105*150*13	108*130*13
105*120*7/8	105*150*15	108*135*9
105*120*8	105*160*10	108*140*12
105*120*9.5	105*160*12	108*140*13
105*122*13	105*160*13	108*144*12
105*125*10	105*170*12	108*145*15
105*125*11	105*180*13	108*152.6*13
105*125*12	105*180*15	109*137*14
105*125*13	105*190*12	109.55*136.53*12.7
105*125*16	106*120.5*6	109.55*139.7*11.13
105*125*8	106*126*12	109.55*139.7*14.30
105*127*10	106.37*127*11.88	109.55*146.05*12.7
105*127*15	106.38*127*9.53	109.55*152.4*14.3
105*129*12	106.38*133.35*12.7	109.93*142.88*11.91
105*130*10	106.38*152.4*15.88	109.93*142.88*12.7
105*130*12	106.38*158.75*12.7	110*120*12
105*130*13	106.6*127*7.95	110*122*6
105*130*15	107*123*11	110*125*10
105*130*9.5	107*130*13	110*125*12
105*135*10	107*140*13	110*125*13
105*135*12	107.95*127*12.7	110*125*7
105*135*12.5	107.95*133.35*11.13	110*125*8
105*135*13	107.95*133.35*12.7	110*125*9.5
105*135*14	107.95*133.35*14.3	110*128*9
105*135*15	107.95*133.35*9.53	110*130*10

SOG&H.T Standard Seal Types

SIZE d*D*H	SIZE d*D*H	SIZE d*D*H
110*130*12	110*170*12	113*150*12
110*130*13	110*170*12.7	113*160*12
110*130*14	110*170*13	113.79*140.06*15
110*130*14.5	110*170*15	113.79*146.05*15
110*130*15	110*180*13	114*126*6
110*130*8	110*180*15	114*127*9
110*132*10	110*190*13	114*130*13
110*135*10	110*200*13	114*135*12
110*135*12	110*215*15	114*135*13
110*135*13	110*200*15	114*140*13
110*135*14	110.34*133.35*11.91	114*145*12
110*135*15	110.34*136.53*12.7	114*145*13
110*135*9	111*135*9	114*145*14
110*140*10	111.13*133.35*12.7	114*146*13
110*140*12	111.13*136.53*12.7	114*146*15
110*140*13	111.13*136.53*14.3	114.3*133.35*11.13
110*140*14	111.13*139.7*11.13	114.3*133.35*9.53
110*140*15	111.13*139.7*12.7	114.3*136.52*11.11
110*140*8	111.13*139.7*14.3	114.3*139.7*12.7
110*140*9	111.13*146.05*14.3	114.3*139.7*14.3
110*142*12	111.13*150.01*25.4	114.3*139.7*9.52
110*142.85*12	111.13*152.4*12.7	114.3*142.88*12.7
110*145*13	111.13*158.75*12.7	114.3*146.05*12.7
110*145*14	111.13*158.75*14.3	114.3*146.05*14.3
110*145*15	111.2*152.6*12.8	114.3*146.05*15.88
110*145*16	111.91*146.05*12.7	114.3*146.05*9.53
110*148*15	112*130*12	114.3*152.4*12.7
110*150*12	112*130*13	114.3*152.4*15.88
110*150*13	112*130*8	114.3*155.58*14.3
110*150*15	112*132*7.5	114.3*158.75*12.7
110*150*16	112*140*12	114.3*161.92*14.3
110*152*15	112*140*13	115*130*12
110*155*12	112*140*15	115*130*13
110*160*12	112*142*14	115*130*9
110*160*13	112*150*15	115*135*10
110*160*15	112.73*133.35*9.53	115*135*12
110*160*16	112.73*139.7*12.7	115*135*13
110*165*12	112.73*139.7*14.3	115*135*14
110*167*17	113*140*13	115*135*15

SOG&H.T Standard Seal Types

SIZE d*D*H	SIZE d*D*H	SIZE d*D*H
115*135*8	117.47*146.05*14.28	120*150*16
115*135*9	117.47*152.4*12.7	120*152.4*13
115*140*10	117.47*152.4*15.87	120*155*10
115*140*11	117.47*152.4*15.88	120*155*12
115*140*12	117.48*146.05*12.7	120*155*14
115*140*13	117.48*158.75*14.3	120*155*15
115*140*14	117.48*158.75*15.88	120*155*16
115*140*15	118*136*13	120*160*12
115*140*16	118*140*13	120*160*13
115*140*8	118*140*16	120*160*14
115*145*12	118*148*15	120*160*15
115*145*13	118*150*12	120*160*16
115*145*14	118*150*15	120*165*15
115*145*15	118*160*15	120*170*15
115*145*16	118*140*12	120*170*16
115*146*16	119.08*152.4*22.23	120*175*13
115*150*12	119.08*152.4*7.95	120*180*12
115*150*13	119.86*146.05*12.7	120*180*13
115*150*14	120*130*7	120*180*14
115*150*15	120*135*12	120*180*15
115*150*16	120*140*10	120*190*13
115*155*10	120*140*12	120*200*14
115*155*12	120*140*13	120*215*13
115*155*13	120*140*14	120*215*15
115*160*13	120*140*15	120.65*139.7*12.7
115*160*15	120*140*16	120.65*139.7*9.53
115*165*15	120*140*8	120.65*142.88*12.7
115*170*12	120*145*10	120.65*146.05*12.7
115*180*12	120*145*12	120.65*146.05*14.3
115*180*15	120*145*13	120.65*149.23*12.7
116*132*12	120*145*14	120.65*152.4*12.7
116*135*13	120*145*15	120.65*152.4*14.28
116*140*13	120*146*12	120.65*152.4*14.3
116*150*13	120*150*10	120.65*152.4*15.88
116*160*13	120*150*11	120.65*152.4*22.23
117.07*142.88*12.7	120*150*12	120.65*155.57*14.3
117.47*142.87*12.7	120*150*13	120.65*158.75*12.7
117.47*142.88*12.7	120*150*14	120.65*165.1*12.7
117.47*146.05*12.7	120*150*15	122*141*10

SOG&H.T Standard Seal Types

SIZE d*D*H	SIZE d*D*H	SIZE d*D*H
122*150*13	125*155*13	127*152.4*12.7
122*150*14	125*155*14	127*152.4*14.3
122*150*15	125*155*15	127*152.4*15
122*150*8	125*160*10	127*152.4*15.88
122*152.4*18	125*160*12	127*152.48*12.7
122.25*140.89*11.91	125*160*13	127*158.75*12.7
122.25*140.89*11.91L	125*160*14	127*158.75*14.28
122.25*150.01*12.7	125*160*15	127*158.75*14.3
122.25*152.4*6.35	125*160*17	127*158.75*15.88
123.8*152.4*12.7	125*160*18	127*158.75*21.03
123.82*146.05*11.13	125*165*13	127*160*15
123.82*146.05*12.7	125*165*15	127*160*16
123.82*149.22*12.7	125*165*16	127*161.92*12.7
123.82*149.23*12.7	125*170*13	127*165.1*12.7
123.82*152.4*12.7	125*170*15	127*165.1*15.88
123.82*155.57*15.88	125*175*13	127*170*14
123.82*158.75*12.7	125*180*15	127*190.5*14.3
123.82*158.75*14.3	125*200*12	128*146*13.5
123.82*168.27*12.7	125*200*15	128*148.2*10
123.83*146.05*11.1L1	125.02*161.93*12.7	128*150*13
123.83*152.4*14.3	125.43*146.05*12.7	128*150*9
123.83*158.75*14.3	125.43*152.4*12.7	128*152*13
124*150*12	125.43*152.4*15.88	128*160*15
124*150*15	125.43*158.75*12.7	128.52*157.61*16
125*140*10	125.43*158.75*14.3	128.6*155.58*12.7
125*140*13	125.43*165.1*12.7	129*160*15
125*143*13	126*140*13	129.39*155.57*12.7
125*145*12	126*146*10	130*140*10
125*145*13	126*146*13	130*146*14
125*145*7.5	126*147*11	130*148*12
125*146*10	126*150*15	130*150*10
125*150*10	126*162*13	130*150*11
125*150*12	127*146*10	130*150*12
125*150*13	127*146.05*11.1	130*150*13
125*150*14	127*146.05*11.13	130*150*14
125*150*15	127*146.05*12.7	130*150*15
125*152.4*12	127*146.05*15.88	130*150*18
125*152.4*15	127*150*12	130*154*11
125*155*12	127*150*13	130*155*10

SOG&H.T Standard Seal Types

SIZE d*D*H	SIZE d*D*H	SIZE d*D*H
130*155*12	132*150*15	135*170*14
130*155*13	132*160*12	135*170*15
130*155*14	132*160*13	135*175*13
130*160*10	132*160*15	135*175*15
130*160*12	133*159*13	135*175*16
130*160*12.5	133.35*152.4*12.7	135*180*15
130*160*13	133.35*158.75*11.13	135*185*13
130*160*14	133.35*158.75*12.7	135*190*15
130*160*15	133.35*158.75*12.7L5	135*192*16
130*160*16	133.35*165.1*12.7	135*200*12
130*160*8	133.35*165.1*14.3	135*200*15
130*162*14	133.35*165.1*15.88	135*215*15
130*162*9	133.35*171.45*12.7	136*165*15
130*165*13	133.35*171.45*19.05	136.53*161.93*12.7
130*165*15	133.4*155.6*14	136.53*165.1*11.13
130*170*12	134*150*15	136.53*168.27*12.7
130*170*13	134*152*13	136.53*171.45*12.7
130*170*14	134*152*14	136.53*200.02*19.05
130*170*15	134.54*155.57*9.53	137.72*171.45*12.7
130*180*12	134.95*158.75*12.7	138*150*12
130*180*15	135*150*15	138*152*12
130*185*12	135*152*11	138*160*13
130*190*12	135*153*9	138*160*15
130*190*15	135*155*12	138*165*15
130*200*12	135*155*13	138*170*15
130*200*15	135*155*15	138.13*159.16*12.7
130*210*12	135*160*12	138.13*165.1*12.7
130*215*15	135*160*13	138.91*165.1*12.7
130*230*14	135*160*14	139.7*158.75*12.7
130*165*12	135*160*15	139.7*165.1*12.7
130.17*155.57*15.88	135*162*13	139.7*168.28*14.3
130.17*161.92*15.88	135*165*12	139.7*171.45*12.7
130.18*155.58*12.7	135*165*13	139.7*171.45*14.3
130.18*155.58*14.3	135*165*14	139.7*171.45*15.88
130.18*158.75*12.7	135*165*14/16	139.7*171.45*19.05
130.18*169.88*19.05	135*165*15	139.7*177.8*15.88
131*145*7	135*170*10	139.7*177.8*19.05
131.78*158.75*12.7	135*170*12	139.7*184.15*15.87
132*150*13	135*170*13	139.7*184.15*15.88

SOG&H.T Standard Seal Types

SIZE d*D*H	SIZE d*D*H	SIZE d*D*H
140*153*9	140*210*15	145*165*15
140*155*15	140*225*8	145*167*13
140*155*8	140*230*15	145*170*12
140*157*8	140*250*15	145*170*13
140*158*10	141.3*168.28*12	145*170*14
140*160*10	141.3*168.28*12.7	145*170*15
140*160*12	142*168*13	145*170*20
140*160*13	142*168*14	145*172*13
140*160*14	142*168*16	145*175*10
140*160*15	142*170*12	145*175*12
140*160*8	142*170*15	145*175*13
140*161*14	142*180*13	145*175*14
140*165*10	142.88*161.92*12.7	145*175*15
140*165*11.5	142.88*165.1*12.7	145*175*17
140*165*12	142.88*168.27*12.7	145*180*12
140*165*13	142.88*168.28*15.88	145*180*13
140*165*15	142.88*168.28*9.53	145*180*14
140*165*16	142.88*171.45*14.3	145*180*15
140*168*13	142.88*174.63*12.7	145*184*15
140*170*10	142.88*174.63*15.88	145*185*13
140*170*12	142.88*180.98*12.7	145*185*15
140*170*13	142.88*182.58*23.01	145*190*16
140*170*14	143*164*14	146*163*7
140*170*15	143*165*10	146*164*14
140*170*16	143*175*16	146*170*14
140*170*8	143*180*13	146*170*18
140*175*12	144*160*10	146.05*161.93*6.35
140*175*13	144*160*12	146.05*168.27*11.13R
140*175*15	144*160*13	146.05*168.27*12.7
140*180*12	144*162*15	146.05*168.27*15.88
140*180*13	144*180*12	146.05*171.45*12.7
140*180*14	144*180*15	146.05*171.45*14.3
140*180*15	145*160*10	146.05*174.63*12.7
140*180*16	145*160*13	146.05*177.8*12.7
140*185*16	145*163*7	146.05*177.8*14.3
140*190*12	145*164*14	146.05*177.8*15.88
140*190*15	145*165*10	146.05*190.5*14.3
140*200*15	145*165*13	146.05*225.43*19.05
140*210*13	145*165*14	148*170*13

SOG&H.T Standard Seal Types

SIZE d*D*H	SIZE d*D*H	SIZE d*D*H
148*170*14	150*210*15	155*180*15
148*170*14.5	150*225*15	155*182*15
148*170*15	150.81*177.8*12.7	155*185*14
148*180*15	150.83*177.8*12.7	155*185*15
148*200*18	151.97*182.58*15.88	155*190*13
149*176*16	152*180*15	155*190*15
149.23*174.63*12.7	152*182*15	155*190*17
149.23*180.98*15.88	152*185*15	155*200*15
149.23*190.5*12.7	152*190*15	155.57*180.97*12.7
149.5*180*13	152.4*171.45*12.7	155.57*180.97*15.88
150*162*9	152.4*177.8*12.7	155.57*180.98*12.7
150*168*12	152.4*177.8*15.88	155.57*193.68*15.88
150*168*13	152.4*180.98*12.7	155.57*193.68*19.05
150*168*15	152.4*180.98*14.3	156*180*16
150*170*12	152.4*190.5*12.7	156*197*13
150*170*13	152.4*190.5*14.3	157*190*15
150*170*15	152.4*190.5*15.88	157.18*190.5*14.3
150*172*12	152.4*190.5*19.05	157.18*190.5*6.35
150*172*13	152.4*196.85*9.53	158*180*15
150*172*15	153*168*9	158*180*16
150*172*17	154*175*12	158*190*15
150*175*13	154*180*12	158.34*190.5*15.88
150*175*16	154*180*15	158.75*182.58*15.88
150*176*16	154*180*17	158.75*184.15*12.7
150*180*12	154*180*18	158.75*190.5*12.7
150*180*13	154*180.98*12.7	158.75*190.5*14.3
150*180*14	155*172*10	158.75*190.5*19.05
150*180*15	155*172*13	158.75*196.85*12.7
150*180*16	155*172*14	158.75*196.85*15.88
150*180*17/18	155*174*12	158.75*196.85*19.05
150*180*18	155*174*13.5	158.75*209.55*12.7
150*180*8.5	155*175*12	160*174*7
150*185*15	155*175*13	160*175*14
150*190*15	155*175*8.5	160*177.8*10
150*195*13	155*176*16	160*180*10
150*200*12	155*178*13	160*180*10/11
150*200*13	155*180*12	160*180*12
150*200*15	155*180*13	160*180*13
150*210*12	155*180*14	160*180*15

SOG&H.T Standard Seal Types

SIZE d*D*H	SIZE d*D*H	SIZE d*D*H
160*182*17	165*190*14	170*200*18
160*185*10	165*190*15	170*200*20/8
160*185*12	165*190*17	170*205*15
160*185*13	165*190*8.5	170*205*16
160*185*14	165*195*13	170*205*18
160*185*15	165*195*15	170*210*12
160*187.8*10	165*195*16	170*210*14
160*188*12	165*195*18	170*210*15
160*190*12	165*195*19	170*210*16
160*190*13	165*200*15	170*210*20
160*190*14	165.1*190.5*12.7	170*215*15
160*190*15	165.1*190.5*14.3	170*215*16
160*190*16	165.1*196.85*12.7	170*220*15
160*190*18	165.1*196.85*15.88	170*240*13
160*195*15	165.1*203.2*12.7	170*240*15
160*200*12	165.1*203.2*15.88	171.45*196.85*12.7
160*200*13	165.1*203.2*19.05	171.45*196.85*15.88
160*200*14	165.1*209.55*12.7	171.45*196.85*19.05
160*200*15	168*190*15	171.45*203.2*12.7
160*200*16	168*190*16	171.45*203.2*15.88
160*210*15	168*200*15	171.45*209.55*14.3
160*215*15	168.27*193.68*12.7	171.45*209.55*15.88
160*240*14	168.27*203.2*15.88	171.45*209.55*19.05
160*290*18	168.28*206.38*12.7	172*190*8.5
161*200*14	168.28*206.38*15.88	172*200*15
161.92*187.33*15.88	169*184*7	173*197*8
161.93*187.32*12.7	170*190*10	173*197*8/5.8
162*190*12	170*190*12	174*191*9
162*190*15	170*190*13	174.62*200.02*12.7
164.31*193.68*15.88	170*190*14	174.62*200.02*14.3
165*180*10	170*190*15	174.63*200.02*15.88
165*180*13	170*190*7	174.63*203.2*15.88
165*185*13	170*190*8.5	175*200*10
165*185*15	170*195*18	175*200*12
165*186*14	170*200*12	175*200*13
165*188*15	170*200*13	175*200*15
165*190*12	170*200*14	175*205*13
165*190*13	170*200*15	175*205*15
165*190*13/15	170*200*16	175*210*14

SOG&H.T Standard Seal Types

SIZE d*D*H	SIZE d*D*H	SIZE d*D*H
175*210*15	180*225*15	190*220*16
175*210*16	180*230*16	190*220*20
175*215*15	180*230*17	190*225*12
175*215*16	180.98*203.2*19.05	190*225*13
175*220*15	180.98*209.55*19.05	190*225*15
177*206*12	180.98*219.08*14.3	190*225*16
177.8*203.2*12.7	180.98*219.08*19.05	190*230*15
177.8*203.2*15.88	182*215*16	190*230*16
177.8*203.2*19.05	184.15*215.9*15.88	190*230*17
177.8*209.55*15.88	184.15*215.9*19.05	190*230*18
177.8*209.55*19.05	184.15*222.25*14.28	190*240*15
177.8*215.9*12.7	184.15*222.25*14.3	190*240*18
177.8*215.9*15.88	184.15*222.25*19.05	190*250*16
177.8*215.9*19.05	185*205*10	190*220*10
177.8*236.55*15.88	185*205*8	190.5*215.9*15.88
178*200*15	185*210*13	190.5*228.6*14.28
178*215*16	185*210*15	190.5*228.6*14.3
180*200*12	185*215*13	190.5*228.6*15.88
180*200*13	185*215*15	190.5*228.6*19.05
180*200*14	185*215*16	192*210*10
180*200*15	185*220*15	193*223*15
180*200*16	185*225*16	193.68*231.77*14.3
180*200*17	185*225*18	193.68*231.78*15.88
180*205*16	185*230*16	193.68*231.8*14.3
180*208*15	185.34*205.59*7.95	193.68*241.3*19.05
180*210*10	187.33*225.43*14.3	195*215*15
180*210*12	187.33*225.43*15.88	195*220*12
180*210*13	187.33*228.6*11.13	195*220*13
180*210*14	188*215*15	195*220*16
180*210*15	188*215*16	195*222*10
180*210*16	188*218*13	195*225*15
180*210*8	190*208*10	195*225*16
180*215*15	190*210*10	195*230*15
180*215*16	190*210*15	195*230*16
180*220*12	190*213*8	195*230*17
180*220*13	190*215*15	195*235*15
180*220*15	190*215*16	195*235*16
180*220*16	190*220*12	195*250*22
180*220*18	190*220*15	196.85*222.25*11.13

SOG&H.T Standard Seal Types

SIZE d*D*H	SIZE d*D*H	SIZE d*D*H
196.85*222.25*12.7	203.2*241.3*14.3	215*245*16
196.85*225.43*15.88	203.2*241.3*15.88	215*248*15
196.85*228.6*15.88	203.2*241.3*19.05	215*250*12
196.85*234.95*15.88	203.2*254*15.88	215*250*16
196.85*234.95*19.05	203.2*254*25.4	215*255*18
198*230*15	204*235*16	215*330*15
200*215*10	205*230*15	215.9*241.3*12.7
200*215*15	205*230*16	215.9*241.3*15.88
200*220*15	205*235*16	215.9*247.65*19.05
200*221*9	205*240*12	215.9*254*14.28
200*225*15	205*240*15	215.9*254*19.05
200*230*13	205*245*16	215.9*266.7*15.88
200*230*14	205*250*16	216*300*26
200*230*15	206.38*244.48*14.3	216*309*26
200*230*15/17	206.38*257.18*25.4	218*250*16
200*230*16	207*230*14	219.08*269.88*15.88
200*230*18	209.55*234.95*12.7	220*240*15
200*235*15	209.55*234.95*15.88	220*245*15
200*235*16	209.55*247.65*14.3	220*245*8
200*235*18	209.55*260.35*15.88	220*250*11
200*240*15	210*225*12	220*250*12
200*240*16	210*230*10	220*250*14
200*240*16.5	210*230*15	220*250*15
200*240*17	210*235*12	220*250*16
200*240*18	210*240*12	220*250*21
200*240*20	210*240*15	220*255*16
200*250*15	210*240*16	220*255*18
200*250*16	210*245*18	220*256*22
200*255*15	210*250*12	220*260*12
200*300*15	210*250*13	220*260*14
200.03*228.6*15.88	210*250*15	220*260*15
200.03*238.13*19.05	210*250*16	220*260*16
203.2*228.6*12.7	210*250*20	220*260*18
203.2*228.6*15.88	210*260*20	220*260*20
203.2*228.6*19.05	212.73*250.83*14.3	220*260*22
203.2*234.95*15.88	215*235*10	220*270*15
203.2*234.95*19.05	215*240*12	220*273*19
203.2*241.3*12.7	215*240*15	220*273*19/20
203.2*241.3*14.28	215*245*12	220*275*23

SOG&H.T Standard Seal Types

SIZE d*D*H	SIZE d*D*H	SIZE d*D*H
220*275*25	235*265*15	250*300*20
220*280*20	235*270*16	250*310*25
222.25*260.35*14.3	235*275*16	250*320*18
225*245*15	235*285*16	254*279.4*14.3
225*250*13	239.73*260.35*12.7	254*279.4*15.88
225*250*15	240*265*15	254*292.1*14.28
225*250*16	240*270*12	254*292.1*14.3
225*260*15	240*270*15	254*304.8*15.88
225*270*15	240*270*16	254*304.8*31.75
228*268*15	240*275*15	255*285*16
228.6*254*11.13	240*275*16	255*290*16
228.6*254*12.7	240*275*18	255*300*18
228.6*254*15.88	240*276*15	257.18*304.8*19.05
228.6*254*19.05	240*278*19	258*290*16
228.6*266.7*14.28	240*280*15	260*280*15
228.6*266.7*14.3	240*280*16	260*280*16
228.6*279.4*15.88	240*280*18	260*281*11
228.6*279.4*19.05	240*280*19	260*290*15
230*250*15	240*280*20	260*290*16
230*251*10	240*290*16	260*290*20
230*255*10	240*300*18	260*296*14
230*255*15	240*300*20	260*300*15
230*260*15	241.3*273.05*15.88	260*300*16
230*260*16	241.3*279.4*14.3	260*300*18
230*260*20	241.3*279.4*15.88	260*300*20
230*269*22	241.3*279.4*19.05	260*304*20
230*270*15	245*270*15	260*305*18
230*270*16	245*270*16	260*310*16
230*270*20	245*273*15	260*320*16
230*270*22	245*280*15	260*320*20
230*280*15	248*280*10	260*320*25
230*280*16	250*270*12	260.35*311.15*19.05
230*285*23	250*280*15	265*290*15
231.78*263.53*15.88	250*280*16	265*290*16
232*275*20	250*280*18	265*294*12
234.95*260.35*15.88	250*285*18	265*295*16
234.95*279.4*19.05	250*290*15	265*300*15
234.95*285.75*15.88	250*290*16	265*300*16
235*260*15	250*290*18	265*310*16

SOG&H.T

Standard Seal Types

SIZE d*D*H	SIZE d*D*H	SIZE d*D*H
266.7*304.8*15.88	280*315*15	300*345*18
266.7*304.8*19.05	280*316*18	300*350*18
266.7*314.33*17.48	280*318*15	300*360*25
268*310*15	280*320*15	304.8*330.2*12.7
269*300*15	280*320*16	304.8*330.2*15.88
270*290*10	280*320*18	304.8*355.6*19.05
270*300*15	280*320*20	305*355*20
270*310*15	280*324*20	305*330*13
270*310*16	280*325*25	310*340*15
270*310*18	280*330*20	310*340*20
270*310*20	280*340*17	310*350*18
270*314*20	282*320*22	310*350*20
270*320*18	285*310*15	310*354*20
270*320*20	285*310*16	310*370*28
270*330*25	285*325*16	314*406*26
273.05*292.1*12.7	285.75*317.5*15.88	315*340*12
273.05*298.45*12.7	287*330*18	315*355*18
273.05*298.45*14.3	288*310*16	315*355*20
273.05*298.45*15.88	290*306*8	315*350*18
273.05*311.15*14.3	290*320*15	315*365*16
273.05*317.5*25.4	290*330*15	315*365*20
275*294*12	290*330*16	317.5*355.6*17.48
275*308*17	290*330*18	317.5*374.65*25.4
275*310*15	290*350*25	320*350*15
275*310*16	290.12*340.92*20.65	320*350*16
275*315*20	292*342*20	320*350*18
275*320*15	295*320*10	320*350*20
276.64*318*18/22	295*320*12.5	320*360*15
278*320*20	295*325*16	320*360*18
278*355*26	295*335*18	320*360*20
279.4*304.8*12.7	298.45*336.55*17.48	320*364*20
279.4*304.8*16.66	300*330*15	320*380*25
279.4*311.15*15.88	300*332*16	320*480*20
279.4*317.5*15.88	300*335*18	323.85*346.08*14.3
279.4*317.5*19.05	300*340*15	325*365*16
279.4*330.2*19.05	300*340*16	330*360*18
280*310*15	300*340*18	330*370*18
280*310*16	300*340*20	330*370*20
280*310*18	300*344*20	330*374*20

SOG&H.T

Standard Seal Types

SIZE d*D*H	SIZE d*D*H	SIZE d*D*H
330*380*10	365*405*15	400*440*15
330*390*25	365*405*18	400*460*25
330*390*28	365*395*15	400.05*438.15*17.48
335*375*18	367*406*18	405*444*18
340*370*15	368.3*419.1*19.05	406.4*444.5*17.48
340*372*16	370*410*15	406.4*457.2*20.64
340*380*15	370*410*20	410*440*12
340*380*18	370*415*20	410*440*15
340*380*20	370*420*20	410*460*22
340*384*20	370*420*25	410*470*25
340*388*12	375*420*16	412.75*457.2*19.05
340*400*28	375*420*20	419.1*457.2*19.05
350*380*12	375*400*20	420*450*15
350*380*15	380*410*12	420*460*16
350*380*16	380*410*13	420*460*20
350*390*18	380*420*15	420*470*15
350*393*12	380*420*18	420*470*20
350*394*20	380*420*20	420*470*22
350*395*20	380*420*25	430*470*18
350*400*25	380*424*20	430*470*20
350*405*20	380*430*19	430*480*22
350*410*15	381*419.1*17.48	430*480*25
350*410*28	385*425*15	440*470*15
350*390*20	385*425*14/16	440*470*20
355*380*13	385*430*25	440*480*20
355*380*15	385*430*30	440*490*25
355.6*393.7*15.88	390*415*12.5	445*480*16
360*390*15	390*420*15	448*480*18
360*390*16	390*425*18	450*480*25
360*390*18	390*430*16	450*490*16
360*392*20	390*430*18	450*490*20
360*400*16	390*430*20	450*510*25
360*400*17	394*420*16	450*500*22
360*400*18	395*430*18	455*495*20
360*400*20	400*430*13	457.2*514.35*25.4
360*404*20	400*440*18	460*500*20
360*420*20	400*440*20	460*510*25
362*388*12	400*450*20	467*510*20
365*405*14	400*451*17.45	470*520*22

SOG&H.T

Standard Seal Types

SIZE d*D*H	SIZE d*D*H	SIZE d*D*H
480*510*15	630*680*20	
480*520*20	630*680*25	
480*530*25	640*680*20	
480*540*25	650*690*20	
482.6*520.7*19.05	660*700*20	
490*530*20	670*710*20	
500*530*25	670*720*25	
500*540*20	700*760*25	
500*550*20	710*760*20	
500*550*22	710*760*25	
500*550*25	780*830*25	
510*560*20	800*870*25	
516*560*18.5	850*900*25	
520*570*20	870*920*22	
520*570*22	960*1020*25	
520*580*25		
530*580*18		
530*580*20		
530*580*25		
533.4*584.2*22.23		
540*580*20		
540*590*20		
540*595*12		
545*580*18		
546.1*596.9*19.05		
550*590*20		
550*600*22		
558.8*596.9*19.05		
560*600*18		
560*600*20		
560*610*20		
570*620*22		
580*640*25		
590.55*628.65*15.88		
600*640*20		
600*650*25		
600*670*30		
610*665*12		
630*670*20		

DKB骨架防塵密封件 DKB Wiper

專門用於防止外界空氣中的粉塵，及會造成部件損傷的雜質進入。保護設備并保持部件密封性能的密封件。唇口用丁腈橡膠制作,具有防止刮油的雙唇口密封件。

Wiper seal used in hydraulic cylinder to prevent dirt, mud... contamination from outside.

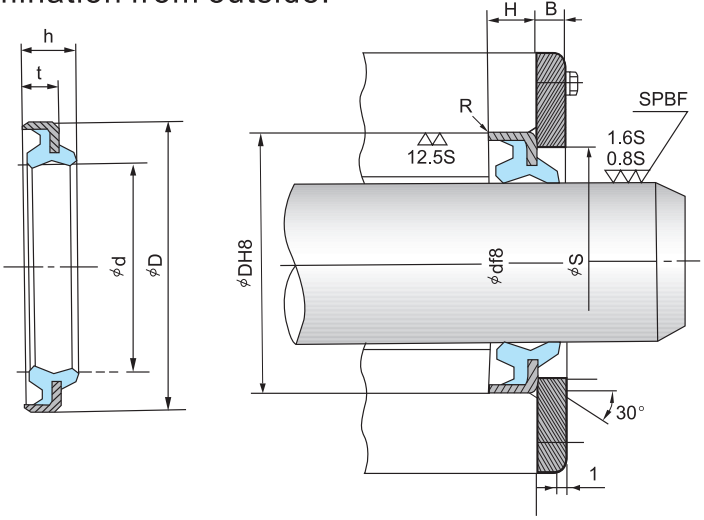

DKB型式–油封規格表 DKB Type Size List

TYPE	d*D*t/h
DKB	12.5*19*3/5
DKB	14*22*4/5.5
DKB	18*26*6/9
DKB	18*30*6/9
DKB	19*31*6/9
DKB	20*28*3.5/5
DKB	20*32*6/9
DKB	22*30*3.5/5
DKB	22*32*6/9
DKB	22*34*6/9
DKB	22*34*7/10
DKB	22*37*6/9
DKB	22.4*34.4*6/9
DKB	25*37*6/9
DKB	28*38*7/10

TYPE	d*D*t/h
DKB	28*40*7/10
DKB	30*40*7/10
DKB	30*42*6/9
DKB	30*44*7/10
DKB	30*45*6/9
DKB	30*45*7/10
DKB	30*47*7/10
DKB	32*40*6/9
DKB	32*42*6/9
DKB	32*44*7/10
DKB	32*45*7/10
DKB	32*52*8/11
DKB	34*46*7/10
DKB	35*47*7/10
DKB	35*47*7/9

TYPE	d*D*t/h
DKB	36*46*5/7
DKB	36*48*7/10
DKB	40*50*7/10
DKB	40*52*7/10
DKB	40*55*7/10
DKB	40*62*8/11
DKB	45*55*7/10
DKB	45*57*7/10
DKB	45*68*7/10
DKB	50*60*7/10
DKB	50*62*7/10
DKB	50*64*8/11
DKB	50*68*7/10
DKB	50*72*7/10
DKB	50*72*8/11
DKB	55*69*8/11
DKB	60*74*8/11
DKB	60*82*8/11
DKB	60*82*11/14
DKB	63*73*7/10
DKB	63*77*8/11
DKB	65*79*8/11
DKB	70*84*8/11
DKB	75*89*8/11
DKB	80*90*7/10
DKB	80*94*8/11
DKB	80*95*7/10
DKB	80*100*12/15
DKB	85*99*8/11
DKB	90*104*8/11
DKB	95*104*8/11
DKB	95*109*8/11
DKB	100*114*8/11
DKB	105*119*8/11
DKB	105*121*8/11
DKB	105*121*9/12
DKB	110*126*8/11
DKB	110*126*9/12
DKB	115*131*9/12
DKB	125*139*8/11

TYPE	d*D*t/h
DKB	130*146*9/12
DKB	140*160*10/14
DKB	180*200*10/14
DKB	190*205*9/12
DKB	190*215*12/17
DKB	200*216*8/12
DKB	200*225*10/14
DKB	200*225*12/16
DKB	220*245*12/16
DKB	260*285*12/19
DKB	300*330*12/20

GA骨架防塵密封件 GA Wiper

專門用於防止外界空氣中的粉塵，及會造成部件損傷的雜質進入。維持設備正常運作并保持部件密封性能的密封件，唇口採用丁腈橡膠等材料制作，具有高防塵性能的標準型防塵密封件。

Wiper seal used in hydraulic cylinder to prevent dirt, mud... contamination from outside.

附注:

活塞杆表面應當抛光和研磨, 特别是在惡劣的潤滑的條件下, 更需要抛光。

Notice:

The treatment of grinding and polish is required on rod surface especially in severe condition.

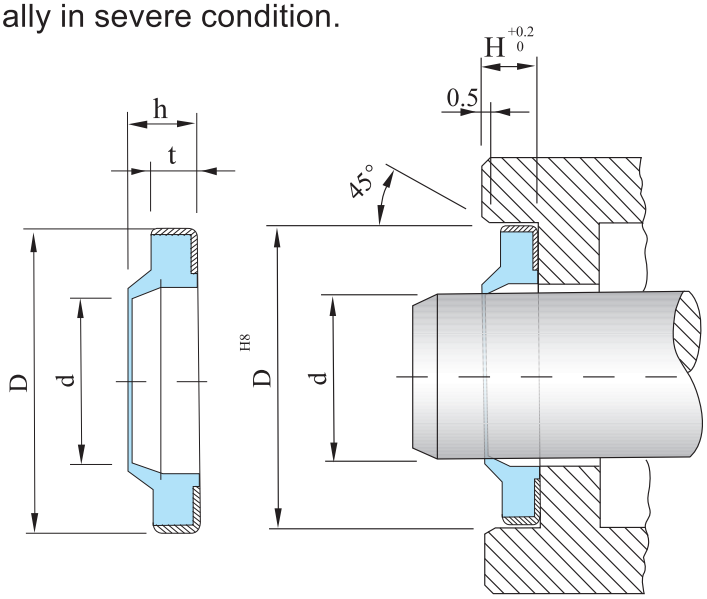

GA型式–油封規格表 GA Type Size List

TYPE	d*D*t/h
GA	6*12*5/7
GA	6*13*3/4.5
GA	6*13*4/6
GA	6*14*5/8
GA	6*16*5/8

TYPE	d*D*t/h
GA	8*14*3.5/5
GA	8*15*3/5
GA	8*18*6/7.5
GA	8*22*3/4.5
GA	10*14.3*3.2/4

TYPE	d*D*t/h
GA	10*16*3/4.5
GA	10*16*5/7
GA	10*18*5/8
GA	10*20*5/8
GA	12*18*3/4.5
GA	12*18*3.5/5
GA	12*18*4/6
GA	12*18*5/7
GA	12*20*4/6
GA	12*22*3/4
GA	12*22*5/8
GA	12.5*20*4/6
GA	14*19*3/5
GA	14*19.8*3/4.5
GA	14*20*2/3
GA	14*20*3/4
GA	14*20*3/6
GA	14*20*3.5/5
GA	14*20*5/7
GA	14*21*3/4
GA	14*22*3/4
GA	14*24*7/10
GA	14.25*26.9*4.2/5.94
GA	15*21*3.5/5
GA	15*22*3/4
GA	15*25*5/8
GA	15*25*7/10
GA	16*22*3/4
GA	16*22*3.5/5
GA	16*22*4/6
GA	16*22*5/8
GA	16*24*3/4
GA	16*24*3.5/5.5
GA	16*24*4/6
GA	16*24*5/8
GA	16*26*5/8
GA	16*28*5/8
GA	17*22*5/8
GA	18*24*3/5
GA	18*24*5/7

TYPE	d*D*t/h
GA	18*26*5/7
GA	18*26*7/10
GA	18*28*3.5/5
GA	18*28*5/7
GA	18*28*7/10
GA	18*30*3/5
GA	18*32*5/9
GA	18*35*5/8
GA	19*26*5/7
GA	19*26*5/8
GA	19.05*25.4*3.18/5.56
GA	19.05*25.4*5.03/6.99
GA	19.05*28.58*4.78/6.3
GA	19.05*31.75*6.35/7.9
GA	20*26*3.5/5
GA	20*26*4/7
GA	20*26*5/7
GA	20*28*3.5/5
GA	20*28*4/6
GA	20*28*5/8
GA	20*30*4/6
GA	20*30*5/8
GA	20*30*5/7
GA	20*30*7/10
GA	20*32*7/10
GA	20*33*5/7
GA	20*35*7/10
GA	20*37*4/6
GA	21*28*3.5/5
GA	22*28*3/4
GA	22*28*5/9
GA	22*28*5/8
GA	22*30*4/5
GA	22*30*5/7
GA	22*32*5/7
GA	22*32*5/9
GA	22*32*7/10
GA	22*34*7/10
GA	22*35*5/8
GA	22*35*7/10

TYPE	d*D*t/h
GA	22*35*7/10
GA	23*33*5/8
GA	24*32*5/7
GA	24*35*5/8
GA	24*35*7/10
GA	25*31*4/6
GA	25*31*5/7
GA	25*32*4/6
GA	25*32*5/7
GA	25*33*4/7
GA	25*34*5/7
GA	25*35*5/8
GA	25*35*5/7
GA	25*35*7/10
GA	25*36*7/10
GA	25*37*7/10
GA	25*38*7/10
GA	25*40*7/10
GA	25*43*5/7
GA	25*45*7/10
GA	25*47*7/10
GA	25.4*34*5/8
GA	25.4*34.93*4.78/7.14
GA	25.4*34.92*6.35/9.53
GA	25.4*36.53*6.35/7.95
GA	26*32*5/8
GA	26*34*5/8
GA	26*35*5/8
GA	26*35*7/10
GA	26*37*4/7
GA	28*35*5/8
GA	28*36*5/7
GA	28*38*5/8
GA	28*38*7/10
GA	28*40*5/7
GA	28*40*7/10
GA	28*42*5/8
GA	28*42*7/10
GA	28.58*38.1*4.78/7.14
GA	28.58*38.1*5.56/7.14

TYPE	d*D*t/h
GA	29*35*8/15
GA	30*36*5/8
GA	30*38*5/7
GA	30*40*4/6
GA	30*40*5/8
GA	30*40*5/7
GA	30*40*7/10
GA	30*42*5/8
GA	30*42*6/9
GA	30*45*5/8
GA	30*45*7/10
GA	30*47*5/7
GA	31.75*38.1*4.75/7.15
GA	31.75*41.28*4.52/6.3
GA	31.75*41.28*4.8/7.14
GA	32*40*4/7
GA	32*40*4/6
GA	32*40*7/10
GA	32*42*5/7
GA	32*42*7/10
GA	32*44*4/6.5
GA	32*45*4/8
GA	32*45*7/10
GA	32*48*6/8
GA	33*43*5/7
GA	33*45*4/8
GA	34*45*7/10
GA	34*50*7/10
GA	35*45*5/8
GA	35*45*7/10
GA	35*46*4/6
GA	35*47*7/10
GA	35*48*6.5/12
GA	35*50*7/10
GA	35*52*7/10
GA	35*53*5/7
GA	35*55*7/10
GA	36*44*5/7
GA	36*45*5/7
GA	36*45*7/10

TYPE	d*D*t/h
GA	36*46*5/8
GA	36*46*5/7
GA	36*46*7/10
GA	36*47*7/10
GA	37*45*4/8
GA	37*47*5/8
GA	37*50*7/10
GA	38*48*7/10
GA	38*53*5/8
GA	38*58*7/10
GA	38.1*46.18*2.84/4.45
GA	38.1*47.63*4.78/7.14
GA	40*46*5/8
GA	40*48*5/7
GA	40*50*3.5/5
GA	40*50*5/8
GA	40*50*7/10
GA	40*52*5/8
GA	40*52*7/10
GA	40*53*5/8
GA	40*56*5/8
GA	40*60*7/10
GA	40*62*7/10
GA	42*50*7/10
GA	42*52*7/10
GA	43*55*7/10
GA	44.45*52.4*2.80/5.08
GA	44.45*53.97*4.76/7.1
GA	45*53*5/7
GA	45*53.5*5/8
GA	45*55*5/7
GA	45*55*7/10
GA	45*56*5/7
GA	45*57*7/10
GA	45*58*7/10
GA	45*60*7/10
GA	45*65*7/10
GA	46*55*7/10
GA	47*55*7/10
GA	48*60*7/10

TYPE	d*D*t/h
GA	48*62*7/10
GA	50*56*5/7
GA	50*56*5/8
GA	50*56*7/10
GA	50*58*5/7
GA	50*60*5/8
GA	50*60*5/7
GA	50*60*7/10
GA	50*62*5/8
GA	50*62*7/10
GA	50*63*7/10
GA	50*65*5/8
GA	50*65*7/10
GA	50*70*7/10
GA	50*85*7/10
GA	50.8*60.33*4.78/7.14
GA	50.8*69.85*6.35/9.53
GA	52*62*7/10
GA	55*63*5/7
GA	55*63*7/10
GA	55*65*5/8
GA	55*65*5/7
GA	55*65*7/10
GA	55*68*4/7
GA	55*70*7/10
GA	55*72*7/10
GA	55*80*5/8
GA	56*65*5/7
GA	56*65*7/10
GA	56*66*5/7
GA	56*66*7/10
GA	56*71*7/10
GA	57.15*66.68*5/7
GA	57.15*69.85*7.95/11.
GA	60*68*5/7
GA	60*70*5/7
GA	60*70*7/10
GA	60*72*5/7
GA	60*74*5/8
GA	60*75*7/10

TYPE	d*D*t/h
GA	60*78*11/15
GA	60*80*7/10
GA	60*80*12/16
GA	62*72*7/10
GA	63*71*5/7
GA	63*73*5/7
GA	63*73*7/10
GA	63*75*7/10
GA	63*80*5/7
GA	63*85*7/10
GA	63.5*73.03*4.78/7.14
GA	63.5*76.2*7.95/11.13
GA	64*75*7/10
GA	65*75*5/7
GA	65*75*7/10
GA	65*80*7/10
GA	65*85*7/10
GA	70*80*5/7
GA	70*80*7/10
GA	70*85*7/10
GA	70*90*7/10
GA	72*82*7/10
GA	75*83*7/10
GA	75*85*7/10
GA	75*87*5/7
GA	75*90*7/10
GA	76*100*5/10
GA	76.2*85.73*4.78/7.14
GA	76.2*88.9*7.95/11.13
GA	78*88*7/10
GA	80*88*4/7
GA	80*88*5/7
GA	80*88*7/10
GA	80*90*5/8
GA	80*90*7/10
GA	80*95*7/10
GA	80*100*6/9
GA	80*100*12/15
GA	81*95*7/10
GA	82*92*7/10

TYPE	d*D*t/h
GA	84*94*5/8
GA	85*95*7/10
GA	90*100*5/7
GA	90*100*7/10
GA	90*110*7/10
GA	93*105*7/10
GA	95*105*7/10
GA	100*110*5/7
GA	100*110*7/10
GA	100*115*7/10
GA	100*115*8/10
GA	100*115*9/12
GA	103*115*7/10
GA	105*115*7/10
GA	110*120*7/10
GA	110*122*7/10
GA	110*125*7/10
GA	110*125*9/12
GA	115*125*7/10
GA	120*130*7/10
GA	120*135*7/10
GA	120*140*8/13
GA	125*135*7/10
GA	125*137*7/10
GA	125*140*7/10
GA	125*140*9/12
GA	130*140*7/10
GA	130*145*9/12
GA	135*145*7/10
GA	135*150*9/12
GA	140*150*7/10
GA	140*155*9/12
GA	145*160*9/12
GA	150*165*9/12
GA	150*166*8/12
GA	152.4*177.8*12.7/15
GA	155*170*9/12
GA	160*170*9/12
GA	160*175*7/12
GA	160*175*9/12

TYPE	d*D*t/h
GA	163*175*7/10
GA	170*185*9/12
GA	170*185*10/14
GA	172*185*5/7
GA	180*195*10/14
GA	185*200*10/14
GA	188*200*7/10
GA	190*202*9/12
GA	190*220*9/12
GA	200*215*9/12
GA	200*220*12/16
GA	210*220*9/12
GA	210*230*10/14
GA	210*230*12/16
GA	210*235*12/17
GA	220*240*12/16
GA	225*245*12/16
GA	225*250*12/16
GA	230*255*12/16
GA	240*260*12/16
GA	250*265*10/16
GA	250*270*12/16
GA	260*280*12/16
GA	260*290*12/16
GA	270*290*12/16
GA	270*295*12/16
GA	280*300*12/16
GA	300*320*12/16
GA	305*315*7/10
GA	320*340*12/16
GA	350*370*12/16
GA	360*380*12/16
GA	360*380*15/18
GA	400*420*12/16

TYPE	d*D*t/h

VK－軸頭端面密封 VK End Cover

主要用于油封的孔口、芯口以及軸承，主要適用于齒輪箱等部件,作爲端法蘭或端蓋的替代物,外徑處的橡膠層保證在油封座中不易漏油。同時也加强了齒輪箱等部件箱體的整齊性和美觀性。

Used for shaft end of gearbox

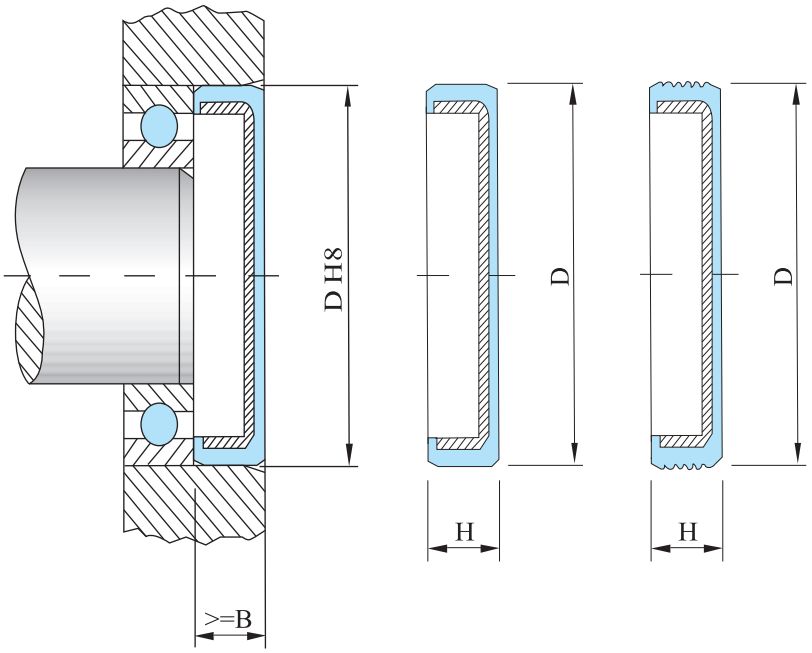

VK型油封規格表 VK Type End Cap Size List

TYPE	D*H
VK	8*5
VK	14*4
VK	16*4
VK	18*4
VK	19*6
VK	19*7
VK	20*4
VK	21*4
VK	22*5
VK	22*7

TYPE	D*H
VK	24*5
VK	24*7
VK	25*4
VK	25*7
VK	26*4
VK	26*6.5
VK	28*5
VK	28*7
VK	30*4
VK	30*6

TYPE	D*H
VK	30*7
VK	30*8
VK	32*5
VK	32*7
VK	32*9.5
VK	35*5
VK	35*6.5
VK	35*7
VK	35*8
VK	37*10
VK	37*5
VK	37*7
VK	38*7
VK	40*4.5
VK	40*5
VK	40*6
VK	40*7
VK	42*6
VK	42*7
VK	42*9.5
VK	45*7
VK	47*10
VK	47*6.5
VK	47*7
VK	47*7.5
VK	47*8
VK	48*7
VK	50*10
VK	50*7
VK	52*10
VK	52*6.5
VK	52*7
VK	55*10
VK	55*7
VK	55*8
VK	56*7
VK	58*9
VK	60*10
VK	60*7
VK	60*8

TYPE	D*H
VK	62*10
VK	62*12
VK	62*7
VK	62*8
VK	62*9
VK	65*10
VK	65*8
VK	68*8
VK	70*10
VK	72*10
VK	72*7
VK	72*8
VK	72*9
VK	75*10
VK	75*12
VK	75*5
VK	75*7
VK	75*9
VK	77*5.5
VK	80*10
VK	80*12
VK	80*7
VK	80*8
VK	85*10
VK	85*12
VK	85*8
VK	90*10
VK	90*12
VK	90*8
VK	92*10
VK	95*10
VK	95*12
VK	98*6
VK	100*10
VK	100*12
VK	105*10
VK	110*10
VK	110*12
VK	115*12
VK	118*13.5

TYPE	D*H
VK	120*12
VK	125*12
VK	128.6*12
VK	130*12
VK	130*8
VK	140*13
VK	140*15
VK	150*13
VK	150*15
VK	160*15
VK	160*16
VK	168*12
VK	168*15
VK	170*13
VK	170*15
VK	180*12
VK	190*12
VK	200*13
VK	210*15
VK	215*15
VK	220*15
VK	225*14
VK	230*14
VK	240*15
VK	250*15
VK	290*18

TYPE	D*H

EC－軸頭端面密封 EC End Cover

主要用于油封的孔口、芯口以及軸承，主要適用于齒輪箱等部件,作爲端法蘭或端蓋的替代物,外徑處的橡膠層保證在油封座中不易漏油。同時也加强了齒輪箱等部件箱體的整齊性和美觀性。

Used for shaft end of gearbox

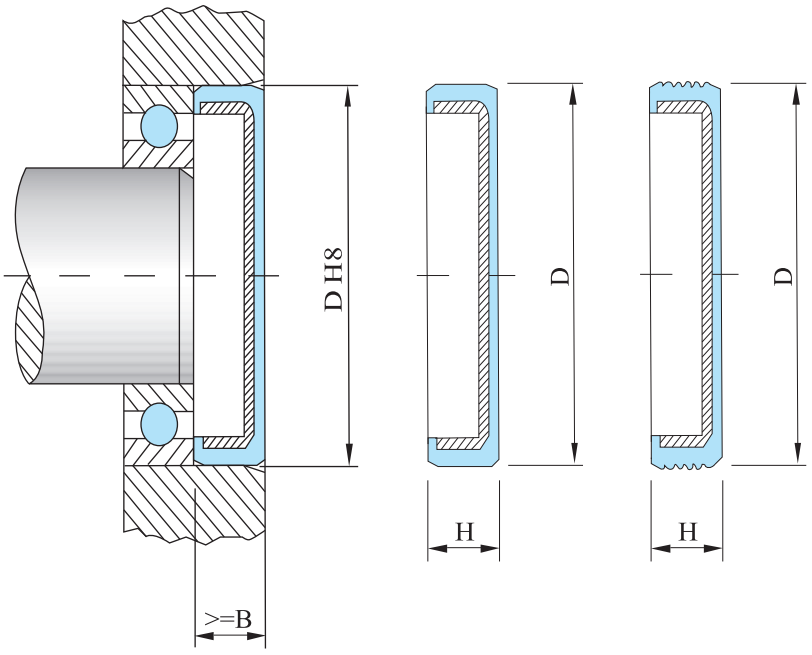

EC型油封規格表 EC Type End Cap Size List

TYPE	D*H
EC	8*5
EC	10*3.5
EC	14*4
EC	15*4
EC	16*4
EC	18*4.5
EC	18*4
EC	19*7
EC	19*6
EC	19*5.5

TYPE	D*H
EC	20*4
EC	21*4
EC	22*7
EC	22*5
EC	24*7
EC	24*5
EC	25*7
EC	25*4
EC	26*7
EC	26*6.5

TYPE	D*H
EC	26*4
EC	28*7
EC	28*5
EC	28*4
EC	30*8
EC	30*7
EC	30*6
EC	30*5
EC	30*4
EC	32*9.5
EC	32*7
EC	32*5
EC	34*18
EC	35*8
EC	35*7
EC	35*6.5
EC	35*6
EC	35*5
EC	35*4.5
EC	36*8
EC	37*7
EC	37*5
EC	37*10
EC	38*7
EC	40*7
EC	40*6
EC	40*5
EC	40*4.5
EC	42*9.5
EC	42*7
EC	42*6
EC	45*9.5
EC	45*7
EC	46*7
EC	47*8
EC	47*7.5
EC	47*7
EC	47*6.5
EC	47*4
EC	47*10

TYPE	D*H
EC	48*7
EC	50*7
EC	50*5
EC	50*14
EC	50*10
EC	52*7
EC	52*6.5
EC	52*10
EC	55*8
EC	55*7
EC	55*10
EC	56*7
EC	58*9
EC	60*8
EC	60*7
EC	60*10
EC	62*9
EC	62*8
EC	62*7
EC	62*12
EC	62*10
EC	65*8
EC	65*10
EC	68*8
EC	70*10
EC	72*9
EC	72*8
EC	72*7
EC	72*10
EC	75*9
EC	75*7
EC	75*5
EC	75*12
EC	75*10
EC	77*5.5
EC	80*8
EC	80*7
EC	80*12
EC	80*10
EC	85*8

TYPE	D*H
EC	85*12
EC	85*10
EC	90*8
EC	90*7
EC	90*12
EC	90*10
EC	92*10
EC	95*12
EC	95*10
EC	98*6
EC	100*15
EC	100*12
EC	100*10
EC	105*10
EC	110*15
EC	110*12
EC	110*10
EC	115*12
EC	115*10
EC	118*13.5
EC	120*8
EC	120*16
EC	120*12
EC	125*12
EC	128.6*12
EC	130*8
EC	130*12
EC	140*15
EC	140*13
EC	145*15
EC	145*12
EC	150*15
EC	150*13
EC	150*12
EC	160*16
EC	160*15
EC	168*15
EC	168*12
EC	168*11
EC	170*15

TYPE	D*H
EC	170*13
EC	180*12
EC	190*15
EC	190*12
EC	200*13
EC	210*15
EC	215*14
EC	220*15
EC	225*15
EC	225*14
EC	230*14
EC	240*15
EC	250*15
EC	260*15
EC	270*15
EC	290*18
EC	290*15
EC	310*12
EC	310*16

TCN–耐壓型骨架密封件 TCN High Pressure Type Oil Seal

此類油封主要適用于有壓力的部件，屬于而壓型回轉用密封件。

TCN型油封的骨架爲整體結構，故在壓力下唇口的變形較小。主要用于軸徑較大，壓力較高（最高0.98MPa）。

Special designed for high pressure applications

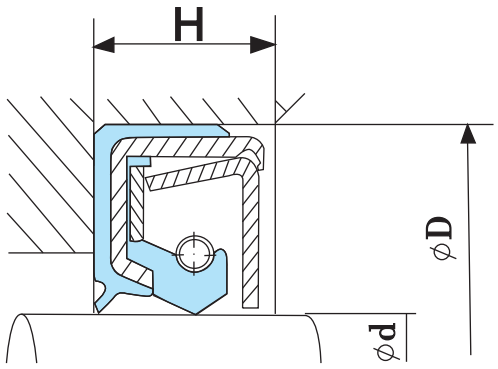

TCN型

TCN型油封規格表 TCN Type Size List

TYPE	d*D*H
TCN	20*40*11
TCN	22*42*11
TCN	25*45*12.5
TCN	25*45*11
TCN	28*48*12.5
TCN	28*48*11
TCN	28.58*47.63*11.13
TCN	30*50*12.5
TCN	30*50*11
TCN	32*52*11
TCN	34*54*11
TCN	35*55*11
TCN	38*58*11
TCN	40*62*11
TCN	40*62*12

TYPE	d*D*H
TCN	42*65*12
TCN	45*65*12
TCN	45*68*12
TCN	48*70*12
TCN	50*72*12
TCN	55*78*12
TCN	60*82*12
TCN	62*85*12
TCN	65*90*13
TCN	68*90*13
TCN	68*90*14
TCN	70*95*13
TCN	72*95*13
TCN	75*95*11
TCN	75*100*13

TYPE	d*D*H
TCN	80*105*13
TCN	80*105*15
TCN	85*110*13
TCN	90*115*13
TCN	95*120*13
TCN	95*120*15
TCN	100*120*13
TCN	100*125*13
TCN	105*135*14
TCN	110*140*14
TCN	115*145*14
TCN	120*150*14
TCN	125*155*14
TCN	130*160*14
TCN	135*165*14
TCN	140*170*14
TCN	150*180*14
TCN	160*190*14
TCN	170*200*16
TCN	190*225*16
TCN	220*255*16
TCN	300*340*19/20
TCN	370*410*16/17
TCN	420*460*15/16

TYPE	d*D*H

TCV–耐壓型骨架密封件 TCV High Pressure Type Oil Seal

此類油封主要適用于有壓力的部件，屬于而壓型回轉用密封件。

TCV型油封的唇部是受壓面積，因油封内部結構是改良而變小，同時又可保持一定的强度。主要用于軸徑較小，壓力爲中壓（最高0.3MPa）的部件。

Shorter flex to provide better pressure resistance

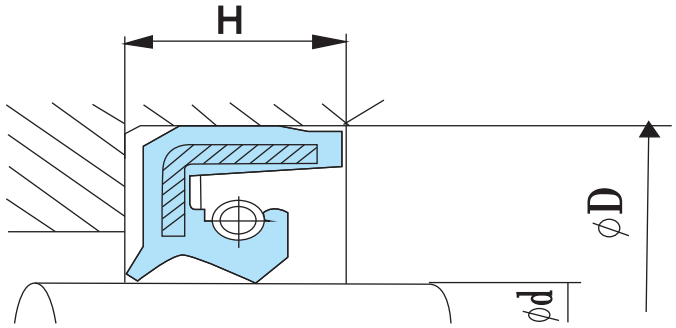

TCV型

TCV型油封規格表 TCV Type Size List

TYPE	d*D*H
TCV	9.53*19.05*6.35
TCV	9.53*22.23*5.94
TCV	10*20*6
TCV	10*23.5*8/5
TCV	12*26*7
TCV	15*26*7
TCV	15*30*6
TCV	15*32*7
TCV	18*35*10
TCV	19*35*6
TCV	20*36*10
TCV	20*40*11
TCV	22*34*7/5
TCV	22.23*38.1*7.95
TCV	25*42*10/7

TYPE	d*D*H
TCV	25*45*11
TCV	25*62*7
TCV	28*40*6
TCV	29*43*8
TCV	30*50*10
TCV	30*50*11
TCV	33.35*72.24*9.53
TCV	35*52*6
TCV	35*55*11
TCV	35*56*12
TCV	39*55*10
TCV	40*60*12
TCV	40*62*11
TCV	42*62*12
TCV	42*65*12

TYPE	d*D*H
TCV	45*58*7
TCV	45*62*9/6
TCV	45*65*8
TCV	45*65*12
TCV	45*68*10
TCV	45*68*12
TCV	45*80*7
TCV	49.23*62.71*7.95
TCV	55*78*10
TCV	55*80*8
TCV	58*80*9
TCV	60*68*8
TCV	60*80*7
TCV	60.33*88.9*12.7
TCV	62*85*7/5
TCV	65*88*7
TCV	65*90*7
TCV	68*90*10
TCV	70*90*12/8
TCV	70*100*10
TCV	75*100*10
TCV	80*100*10
TCV	80*105*13
TCV	80*120*10
TCV	90*115*13
TCV	90*125*12
TCV	90*130*12
TCV	95*125*12/8
TCV	95*125*12
TCV	110*140*13
TCV	126*150*15
TCV	130*160*12
TCV	139.7*158.75*11.13
TCV	180*210*8.5

TYPE	d*D*H

VG型回转用密封件 VG Type Oil Seal

適用於有潤滑脂的場合, 有粉塵及有壓力的場合不建議使用。
Not suitable for application with dirt and contamination

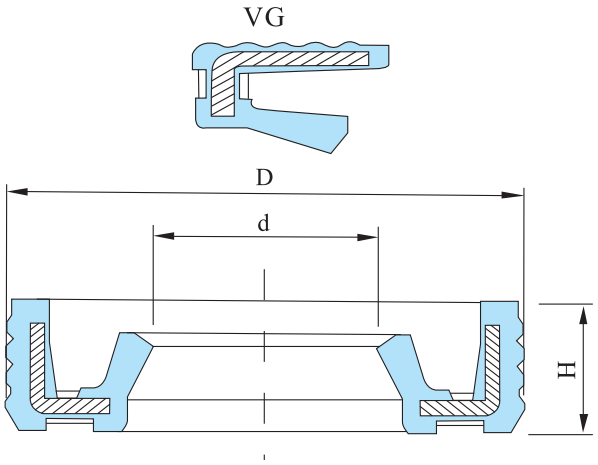

VG型油封規格表 VG Type Size List

TYPE	d*D*H
VG	4*16*6
VG	6*10*3
VG	6*12*2
VG	6*15*4
VG	8*12*3
VG	8*14*4
VG	8*15*3
VG	8*15*5
VG	8*16*3
VG	8*16*4
VG	9*16*3
VG	9*28*4.1
VG	10*14*3
VG	10*16*4
VG	10*17*3
VG	10*22*3
VG	12*16*3
VG	12*17*2.5
VG	12*18*3
VG	12*18*4

TYPE	d*D*H
VG	12*19*3
VG	12*23*3
VG	12*28*3
VG	13*19*3
VG	14*20*3
VG	14*22*3
VG	14*22*4
VG	14*26*3
VG	15*21*2
VG	15*21*3
VG	15*23*3
VG	15*28*3
VG	15.88*20.65*3.18
VG	15.88*22.23*3.96
VG	15.88*25.4*6.35
VG	16*22*3
VG	16*22*4
VG	16*24*3
VG	16*25*3
VG	17*23*3

TYPE	d*D*H
VG	17*25*3
VG	17*28*3.5
VG	18*24*3
VG	18*24*4
VG	18*26*4
VG	19*25*3.2
VG	19*26*3
VG	19*27*4
VG	20*26*4
VG	20*28*4
VG	20*30*4
VG	21*29*4
VG	22*28*4
VG	22*29*4
VG	22*30*4
VG	24*31*4
VG	24*32*4
VG	25*32*4
VG	25*33*4
VG	25*35*4
VG	25.4*31.75*3.18
VG	25.4*39.7*4.76
VG	26*32*4
VG	26*34*4
VG	28*35*4
VG	28*37*4
VG	28*40*4
VG	28*40*5
VG	29*37*4
VG	29*38*4
VG	30*36*5
VG	30*37*4
VG	30*40*4
VG	30*42*4
VG	30.18*42.06*6.35
VG	31*40*4
VG	31.75*39.7*2.77
VG	31.75*42.88*4.78
VG	32*42*4
VG	32*45*4
VG	34*42*4

TYPE	d*D*H
VG	35*41*4
VG	35*42*4
VG	35*43*4
VG	35*45*4
VG	37*47*4
VG	38*48*4
VG	39*52*5
VG	40*47*4
VG	40*48*4
VG	40*50*4
VG	40*52*5
VG	42*52*4
VG	43*53*4
VG	45*52*4
VG	45*55*4
VG	50*58*4
VG	50*60*4
VG	50*60.5*5
VG	50*62*5
VG	55*63*4
VG	55*63*5
VG	55*65*5
VG	55*68*4
VG	57.15*66.68*4.78
VG	60*72*4
VG	60*75*5
VG	63*75*3
VG	63*75*5
VG	63.5*79.38*6.35
VG	65*80*4
VG	70*78*5
VG	70*80*5
VG	70*85*4
VG	80*90*5
VG	90*100*5
VG	90*105*5
VG	100*110*5

VC型回转用密封件 VC Type Oil Seal

適用于潤滑脂及有粉塵的場合,有壓力的場合不建議使用。

Not suitable for application with dirt and contamination

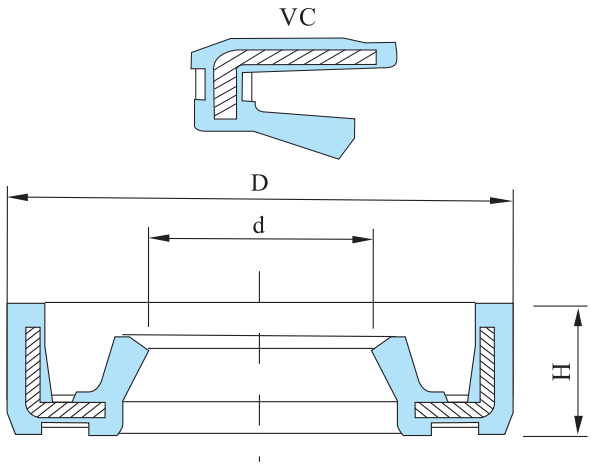

VC型油封規格表 VC Type Size List

TYPE	d*D*H
VC	3*10*6
VC	3.17*10*6
VC	3.18*17.07*5.94
VC	4*8*2
VC	4*9*3
VC	4*13*5
VC	4.5*15*5
VC	4.8*14*4
VC	4.8*15*4
VC	4.78*15.88*6.35
VC	4.8*25*5.5
VC	5*9*2
VC	5*9.3*3
VC	5*10*2
VC	5*10*4
VC	5*11*3
VC	5*11*4
VC	5*12*5
VC	5.56*19.05*6.35
VC	6*10*2

TYPE	d*D*H
VC	6*10*2.5
VC	6*11*4
VC	6*12*2
VC	6*12*5
VC	6*14*3
VC	6*14*4
VC	6*15*5
VC	6*16.7*3
VC	6*18*6
VC	6*19*3
VC	6.35*9.35*1.98
VC	6.35*9.53*3.18
VC	7*11*2
VC	7*13*4
VC	7*14*4
VC	7*16*4.5
VC	8*12*3
VC	7.95*12.57*2.92
VC	7.95*12.7*3.18
VC	8*13*3.5

TYPE	d*D*H
VC	8*14*3
VC	7.95*14.3*6.35
VC	8*15*4
VC	8*15*6
VC	8*16*3
VC	8*16*3.5
VC	8*17*5
VC	8*22*5
VC	9*13*3
VC	9*15*3
VC	9*15*4
VC	9*17.5*4
VC	9*22*3.5
VC	9.53*15.88*3.18
VC	9.52*17.46*3.56
VC	9.53*19.05*6.35
VC	10*14*3
VC	10*15*3
VC	10*15*4
VC	10*16*3
VC	10*17*3
VC	10*17*4
VC	10*18*4
VC	10*21*4
VC	10*22*3
VC	10*24*4
VC	10*26*3
VC	10*26*4
VC	11*17*3
VC	11.11*15.87*3.17
VC	11.13*16*2.92
VC	12*16*3
VC	12*17*4
VC	12*18*3
VC	12*18*4
VC	12*19*3
VC	12*19*5
VC	12*20*4
VC	12*21*3
VC	12*22*3

TYPE	d*D*H
VC	12*22*4
VC	12*24*4
VC	12.7*17.48*2.39
VC	12.7*19.05*3.18
VC	12.7*19.05*4.78
VC	12.7*22.22*3.18
VC	12.7*22.23*5.16
VC	13*19*3
VC	13.5*30*3
VC	14*18*3
VC	14*20*2.55
VC	14*20*3
VC	14*20*4
VC	14*20*5
VC	14*21*3
VC	14*21*4
VC	14*22*3
VC	14*32*9
VC	14.3*19.05*2.92
VC	14.27*19.05*2.92
VC	15*19*6
VC	15*21*3
VC	15*21*4
VC	15*22*5
VC	15*23*3
VC	15*25*3
VC	15*25*4
VC	15*25*5
VC	15*26*4
VC	15*28*4
VC	15*30*5
VC	15.88*20.65*2.36
VC	15.88*22.23*3.18
VC	16*21*4.5
VC	16*22*2
VC	16*22*3
VC	16*22*4
VC	16*22*7
VC	16*24*3
VC	16*24*4

TYPE	d*D*H
VC	16*25*5
VC	16*26*4.5
VC	17*22*5
VC	17*23*3
VC	17*24*3
VC	17*24*4
VC	17*30*5
VC	17*32*6
VC	17*35*3
VC	17*35*5
VC	18*24*3
VC	18*24*4
VC	18*24*6
VC	18*25*3
VC	18*25*5
VC	18*26*4
VC	18*32*9
VC	19*25*3.5
VC	19*26*5
VC	19*32*5
VC	19*34.6*5.5
VC	19*35*4.5
VC	19.05*25.4*3
VC	19.05*25.4*3.18
VC	19.05*25.4*3.96
VC	19.05*27*4.78
VC	19.05*28.58*3.96
VC	20*26*4
VC	20*27*3
VC	20*27*4
VC	20*28*4
VC	20*32*4
VC	20*32*5
VC	20*35*4
VC	20*38*5
VC	20*40*5
VC	21*31*3.5
VC	22*28*4
VC	22*29*4
VC	22*30*4.5

TYPE	d*D*H
VC	22*30*5
VC	22*40*5
VC	22*47*4
VC	22.23*28.58*3.18
VC	22.23*30.18*4.78
VC	22.23*32.94*3.58
VC	22.25*35*3.5
VC	23*28*3
VC	23.42*29.77*4.37
VC	24*30*4
VC	24*32*4
VC	24.21*29.77*3.96
VC	25*30*4
VC	25*30*7
VC	25*31*5
VC	25*32*4
VC	25*35*4
VC	25*35*5
VC	25*38*5
VC	25*40*5
VC	25*42*4.5
VC	25*42*5
VC	25.4*31.75*3.18
VC	25.4*33.35*3.18
VC	26*40*5
VC	27*33.35*3.18
VC	27*37.2*3
VC	27*47*6
VC	28*34*4
VC	28*35*3
VC	28*35*4
VC	28*36*4
VC	28*37*6
VC	28*38*5
VC	28.5*38.5*6
VC	28.58*34.92*3.18
VC	28.58*38.1*6.35
VC	29.5*52*5
VC	30*36*2.5
VC	30*37*3.2

TYPE	d*D*H
VC	30*37*4
VC	30*38*4
VC	30*38*5
VC	30*40*4
VC	30*42*4.5
VC	30*42*5
VC	30*42*6.35
VC	30*45*6
VC	30.96*50.39*10.31
VC	31.75*38.1*3.96
VC	32*40*5
VC	32*42*4
VC	32*45*4
VC	32*47*7
VC	32*48*6
VC	32*52*6
VC	33.35*39.7*3.18
VC	33.35*46.05*3.96
VC	33.35*52.4*6.35
VC	34*45*4
VC	35*40*4
VC	35*42*4
VC	35*43*4
VC	35*48*5
VC	35*52*5
VC	35*62*6
VC	37*47*4
VC	37*48*4.5
VC	38*50*5
VC	38*62*4
VC	40*45*2
VC	40*47*4
VC	40*47*5
VC	40*48*4
VC	40*49*4
VC	40*50*4
VC	40*52*5
VC	40*56.34*7.93
VC	40*62*6
VC	41*55*4

TYPE	d*D*H
VC	41.28*60.33*9.53
VC	43*53*4
VC	44*52*10
VC	44*55*5
VC	44*65*6
VC	45*50*2
VC	45*52*4
VC	45*60*5
VC	45*60*6
VC	45*62*8
VC	45*68*6
VC	46*54*4
VC	47.63*57.15*4.78
VC	48*58*4
VC	48*65*7
VC	50*58*4
VC	50*60*4
VC	50*62*5
VC	50*68*7
VC	50*68*8.5
VC	50*72*5
VC	52*60*5
VC	53*65*5
VC	53.97*77.77*12.06
VC	55*63*4
VC	55*63*5
VC	55*72*7
VC	58.5*100*8
VC	60*68*5
VC	60*82*6
VC	62*70*10
VC	62.5*73.03*2.77
VC	65*88*6
VC	70*90*10
VC	73.02*85.73*6.35
VC	74*95*7
VC	76.2*86.51*5.16
VC	80*90*6
VC	80*95*5
VC	80*105*7

TYPE	d*D*H
VC	82.55*107.95*12.7
VC	95.25*120.65*12.7
VC	100*125*8
VC	101.6*127*9.53
VC	110*127*7
VC	112*130*7
VC	120*135*7
VC	150*160*15
VC	188*199.2*8
VC	190*200*15
VC	210*240*15
VC	245*260*7

TYPE	d*D*H

VB型回转用密封件 VB Type Oil Seal

適用於有潤滑脂的場合，有粉塵及有壓力的場合不建議使用。

Not suitable for application with dirt and contamination

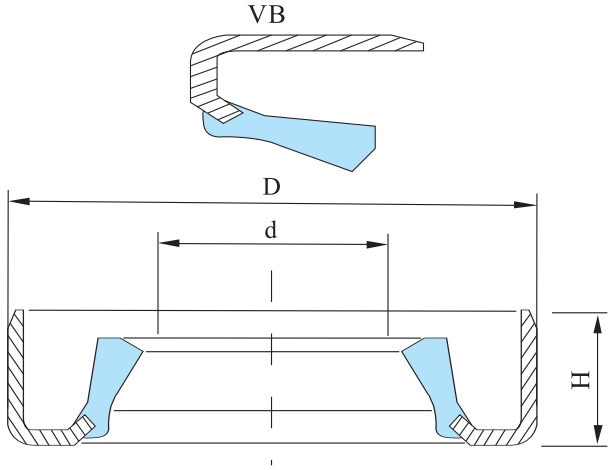

VB型油封規格表 VB Type Size List

TYPE	d*D*H
VB	3*8*2
VB	5*9*2
VB	5.94*11.89*2.38
VB	5*10*2
VB	6*10*2
VB	6*13*4.5
VB	6*13*5
VB	6.35*12.7*4.78
VB	6.35*9.53*3.18
VB	7.14*11.13*3.18
VB	7.95*14.3*3.96
VB	7.95*15.88*3.18
VB	7.95*15.88*3.96
VB	8*12*3
VB	9.53*12.7*2.26
VB	9.53*15.88*3.18
VB	9.53*15.88*4.76
VB	9.53*22.23*3.18
VB	9.93*14.3*2.39
VB	10*15*3

TYPE	d*D*H
VB	10*16*4
VB	10*17*3
VB	11.13*15.83*3.18
VB	12*16*3
VB	12*18*3
VB	12*18*4.8
VB	12*22*4.5
VB	12.7*17.48*2.45
VB	12.7*19.05*3.17
VB	12.7*19.05*4.78
VB	12.7*22.22*6.35
VB	12.7*22.23*3.18
VB	12.7*28.58*3.18
VB	14*20*3
VB	14*32*11
VB	14.3*22.23*4.78
VB	15*19*4
VB	15*21*3
VB	15*22*3
VB	15*22*4

TYPE	d*D*H
VB	15*23*3
VB	15*28*3
VB	15*32*6
VB	15.2*28*4
VB	15.88*20.65*2.39
VB	15.88*20.83*2.39
VB	15.88*22.23*3.18
VB	15.88*25.4*3.17
VB	15.88*25.4*6.35
VB	15.88*28.58*6.35
VB	16*20*2.5
VB	16*21*3
VB	16*22*3
VB	16*22*4
VB	16*24*5
VB	16*25*4
VB	16.99*31.75*6.35
VB	17*23.5*3.2
VB	17*25*3
VB	17*29*3.2
VB	17.47*22.22*3.17
VB	17.48*22.23*2.39
VB	17.48*25.4*4.78
VB	18*24*3
VB	18*26*5
VB	19*26*3.5
VB	19*32*11
VB	19.05*25.4*3.18
VB	19.05*25.4*6.35
VB	19.05*31.75*6.35
VB	20*24*2.5
VB	20*28*4
VB	20*30*4
VB	22*30*4
VB	22.23*28.58*6.35
VB	22.23*30.18*3.96
VB	23*28*3
VB	23.83*30.18*3.18
VB	24*30*3
VB	24*32*4

TYPE	d*D*H
VB	24.99*46.43*4.78
VB	25*31*2.5
VB	25*32*3
VB	25*32*4
VB	25*32*5
VB	25*33*4
VB	25*34*5
VB	25*35*4
VB	25*38*4
VB	25.4*31.75*3
VB	25.4*31.75*3.18
VB	25.4*33.35*3.18
VB	25.4*33.35*3.96
VB	25.4*38.1*4.78
VB	25.4*44.45*6.35
VB	26.19*34.92*4.78
VB	27*32*3
VB	27*33.35*3.18
VB	27*34*3
VB	27*34.92*6.1
VB	28*35*3
VB	28*35*4
VB	28*35*6
VB	28*37*6
VB	28*39*6
VB	28.56*35*4
VB	28.57*35*2.2
VB	28.57*35*4
VB	28.58*34.92*3.96
VB	28.58*38.1*4.78
VB	28.58*39.7*6.35
VB	28.58*44.45*6.35
VB	29*36*8
VB	30*34*4
VB	30*35*3
VB	30*37*3
VB	30*37*4
VB	30*38*3
VB	30*38*4
VB	30*40*4

TYPE	d*D*H
VB	30.18*41.28*4.78
VB	31*37*3
VB	31.75*42.88*3.18
VB	31.75*42.88*4.78
VB	31.75*44.45*6.35
VB	31.75*50.27*6.35
VB	32*38*3.5
VB	32*41*4
VB	32*42*4
VB	32*45*4
VB	33*39*5
VB	33*40*3
VB	33.35*47.63*4.78
VB	34.92*57.94*7.95
VB	35*41*2.5
VB	35*42*1.9
VB	35*42*3.5
VB	35*42*4
VB	35*45*4
VB	35*47*5
VB	35*48*4
VB	35*60*5
VB	36*42*3.5
VB	36.53*44.45*3.96
VB	36.65*41.75*3
VB	37.5*45*4
VB	38*43*3
VB	38*48*4
VB	38*50*4
VB	38*50*5
VB	38.1*44.45*2.77
VB	38.1*47.63*4.78
VB	38.1*47.63*6.35
VB	39.7*60.33*6.35
VB	40*47*4
VB	40*50*4
VB	40*50*6
VB	40*54*5
VB	40*55*6.5
VB	41.28*47.63*2.77

TYPE	d*D*H
VB	42*52*4
VB	44.45*53.98*4.9
VB	44.45*57.15*12.7
VB	44.45*57.15*4.37
VB	44.45*57.15*6.35
VB	44.45*76.2*9.53
VB	44.7*54*6
VB	45*50*3
VB	45*52*3
VB	45*52*4
VB	45*53*7
VB	45*55*4
VB	45*65*5
VB	47.63*58.75*9.53
VB	48*55*4
VB	50*58*4
VB	50*62*4
VB	50*62*5
VB	50*63*5
VB	50*80*6
VB	50.8*60.32*6.35
VB	51*58*4
VB	53.97*63.5*5.16
VB	53.98*73.03*6.35
VB	55*62*4
VB	55*63*5
VB	55*67*5
VB	55*68*4
VB	55*70*5
VB	55*82*10
VB	55*90*6
VB	57.15*66.68*6.35
VB	57.15*69.85*6.35
VB	57.94*69.85*5.56
VB	58*65*3.5
VB	60*67*4
VB	60*75*4
VB	60*78*7
VB	63*75*5
VB	63.5*73.02*3.18

TYPE	d*D*H
VB	65*75*8
VB	65*77*7
VB	65*80*6
VB	65*88*6
VB	69.47*79.38*2.77
VB	69.85*104.78*11.13
VB	69.85*79.38*2.77
VB	69.85*79.38*4.78
VB	70*85*4
VB	71*86*5
VB	75*100*8
VB	79.38*104.78*6.35
VB	80*95*5
VB	82.55*96.91*2.77
VB	88.9*98.45*4.78
VB	100*110*4
VB	107.95*122.22*2.77
VB	110*130*10
VB	110*135*8
VB	125*140*7
VB	130*145*7
VB	130*155*11
VB	150*180*13
VB	160*190*13

TYPE	d*D*H

RB型油封 RB Seal

由一個金屬托架保護彈性體密封件，主要是對外界污染物的入侵起隔阻作用。

Axial face seal are mounted on the shaft, rotate with the shaft and seal against a perpendicular counter face

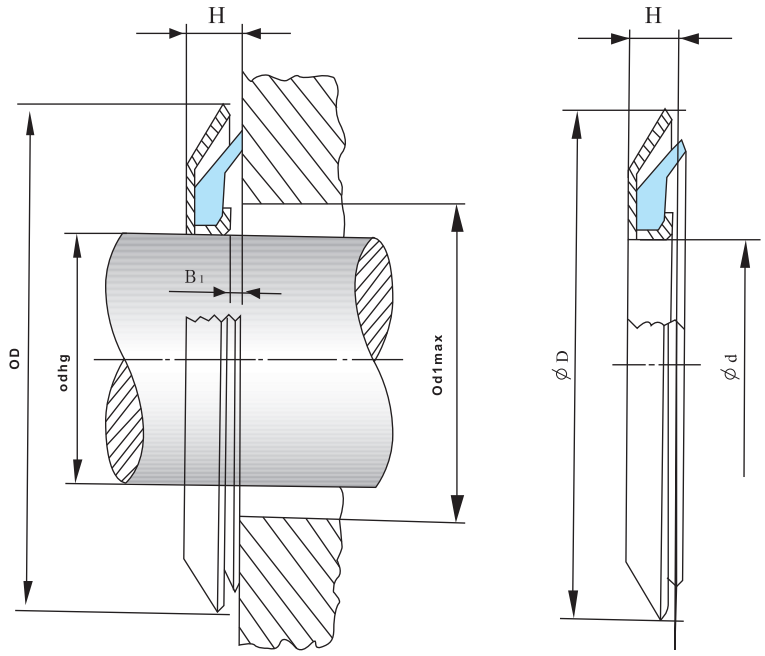

RB型規格表 RB Type Size List

TYPE	d*D*H
RB10	10*24*3.5
RB12	12*26*3.5
RB14	14*30*4
RB15	15*30*4
RB16	16*32*4
RB17	17*32*4
RB18	18*33*4
RB20	20*35*4
RB22	22*40*4.7
RB24	24*40*4

TYPE	d*D*H
RB25	25*40*4
RB26	26*40*4
RB28	28*43*4
RB30	30*47*4.5
RB32	32*49*4.5
RB35	35*52*4.5
RB38	38*55*4.5
RB40	40*57*4.5
RB45	45*62*4.5
RB48	48*65*4.5

TYPE	d*D*H
RB50	50*70*5.5
RB52	52*72*5.5
RB53	53*73*5.5
RB55	55*75*5.5
RB58	58*78*5.5
RB60	60*80*5.5
RB62	62*82*5.5
RB65	65*85*5.5
RB68	68*88*5.5
RB70	70*90*5.5
RB72	72*92*5.5
RB75	75*95*5.5
RB78	78*98*5.5
RB80	80*100*5.5
RB85	85*105*5.5
RB90	90*110*5.5
RB95	95*115*5.5
RB100	100*120*5.5
RB105	105*125*5.5
RB120	120*143*6.5
RB125	125*148*6.5
RB135	135*159*6.5

TYPE	d*D*H

9RB型油封 9RB Seal

由一個金屬托架保護彈性體密封件，主要是對外界污染物的入侵起隔阻作用。

Axial face seal are mounted on the shaft, rotate with the shaft and seal against a perpendicular counter face

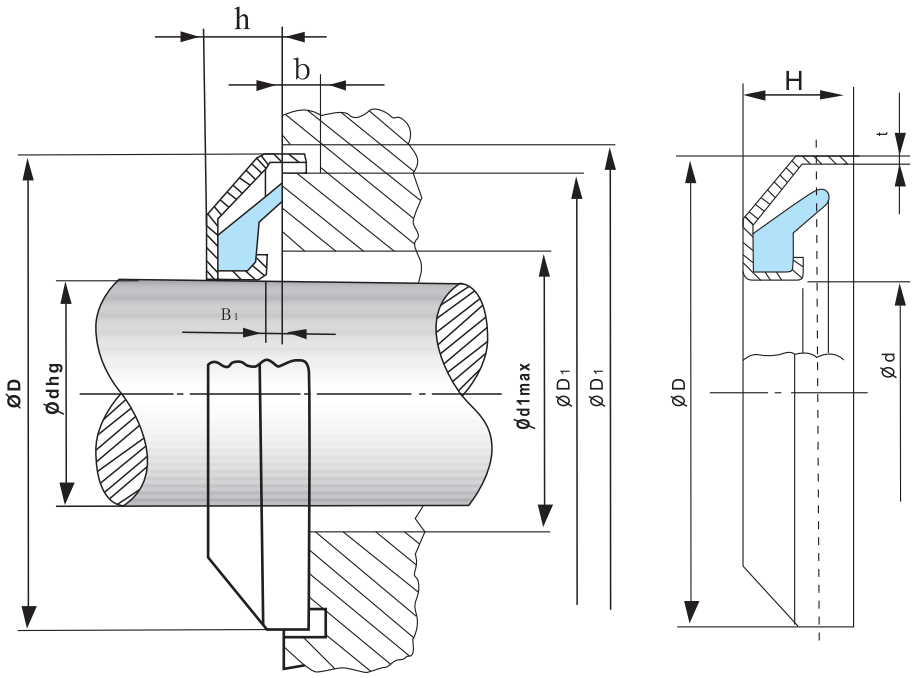

9RB型規格表 9RB Type Size List

TYPE	d*D*h/H
9RB15	15*32*4/6
9RB17	17*34*4/6
9RB20	20*37*4/6
9RB25	25*42*4/6
9RB30	30*48*4.5/6.5
9RB35	35*53*4.5/6.5
9RB40	40*58*4.5/6.5
9RB45	45*63*4.5/6.5
9RB50	50*72*5.5/7.5
9RB55	55*77*5.5/7.5

TYPE	d*D*h/H
9RB60	60*82*5.5/7.5
9RB65	65*87*5.5/7.5
9RB70	70*92*5.5/7.5
9RB80	80*102*5.5/7.5
9RB85	85*107*5.5/7.5
9RB90	90*112*5.5/7.5
9RB95	95*117*5.5/7.5
9RB100	100*122*5.5/7.5

DC型油封 DC Type Seal

由兩個相反方向的密封唇對置組合而成的油封，可隔離兩種密封液體

Assembled by two sealing part in counter direction used to divided two medium.

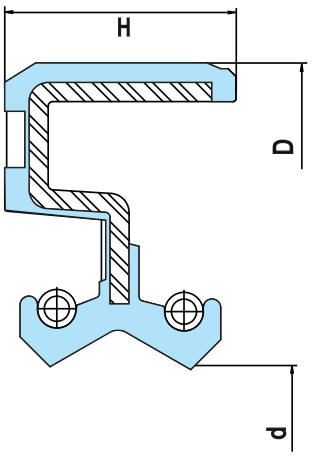

DC型油封规格表 DC Type Seal Size List

TYPE	d*D*H
DC	6*12*8
DC	6*18*8
DC	8*16*10
DC	8*22*7
DC	10*20*8
DC	10*26*7
DC	12*20*8
DC	12*22*7
DC	12*24*10
DC	12*26*8
DC	13*26*10
DC	14*26*7
DC	14*28*7
DC	14*30*15
DC	15*24*7

TYPE	d*D*H
DC	15*28*7
DC	15*30*7
DC	15*35*9
DC	15.88*28.58*7.95
DC	16*28*7
DC	16*28.58*7
DC	16*35*6/8
DC	17*28*7
DC	17*28*8
DC	17*28.58*7
DC	17*29*7
DC	17*30*7
DC	17*30*9
DC	17*32*7
DC	17*35*7

TYPE	d*D*H
DC	17*35*10
DC	17*40*7
DC	17.48*28.58*7.95
DC	18*28*8
DC	18*30*7
DC	18*30*8
DC	18*32*8
DC	18*40*8
DC	19*35*10
DC	19*47*14
DC	19.05*38.1*9.53
DC	19.46*46.84*13.89
DC	20*30*7
DC	20*32*7
DC	20*32*8
DC	20*35*7
DC	20*35*8
DC	20*35*10
DC	20*36*10
DC	20*38*18
DC	20*40*7
DC	20*40*8
DC	20*40*10
DC	20*40*14
DC	21*32*7
DC	21*40*7
DC	22*32*7
DC	22*35*7
DC	22*36*6
DC	22*36*10
DC	22*40*7
DC	24*42*10
DC	25*35*7
DC	25*35*8
DC	25*35*10
DC	25*37*6
DC	25*38*8
DC	25*40*7
DC	25*40*8
DC	25*40*10

TYPE	d*D*H
DC	25*42*10
DC	25*45*14
DC	25*47*8
DC	25*47*10
DC	25*52*7
DC	25*52*8
DC	25*52*9
DC	25.4*41.1*9
DC	25.4*41.28*9.53
DC	25.4*41.28*11.13
DC	26*47*8
DC	26*52*8
DC	27*37*10.5
DC	27*39*9.5
DC	28*38*8
DC	28*40*8
DC	28*40*9
DC	28*47*8
DC	28*47*10
DC	28*56*8
DC	30*40*8
DC	30*40*10
DC	30*40.5*10.5
DC	30*42*7
DC	30*42*11
DC	30*43*10.5
DC	30*45*8
DC	30*45*8.5
DC	30*45*10
DC	30*45*12
DC	30*45*13
DC	30*47*10
DC	30*48*8
DC	30*50*10
DC	30*52*10
DC	30*55*10
DC	30*62*14
DC	31*43*10.3
DC	31.5*52*7
DC	31.75*50.8*9.53

TYPE	d*D*H
DC	31.75*50.8*12.7
DC	32*43*10.5
DC	32*44*8
DC	32*45*8
DC	32*47*12
DC	32*52*7
DC	33*46*11
DC	34.93*53.98*9.53
DC	35*45*7
DC	35*45*10
DC	35*47*7
DC	35*47*10
DC	35*48*11
DC	35*50*11
DC	35*52*7
DC	35*52*10
DC	35*52*12
DC	35*58*14
DC	35*62*7
DC	35*62*8
DC	35*62*14
DC	35*65*5/7
DC	35*80*12
DC	36*48*10
DC	36*52*7
DC	36*52*8
DC	36*52*9
DC	36*72*7/9
DC	37*50*11
DC	38.1*63.5*18.64
DC	39*52*11
DC	40*52*7.5
DC	40*54*11
DC	40*55*7
DC	40*55*8
DC	40*55*8
DC	40*55*10
DC	40*58*10.5
DC	40*60*10
DC	40*62*10

TYPE	d*D*H
DC	40*62*11
DC	40*62*12
DC	40*62*13
DC	40*65*10
DC	40*65*20
DC	40*70*5/7
DC	40*72*7
DC	41*54*11
DC	42*65*11
DC	43*54*11
DC	45*57*11
DC	45*62*8
DC	45*62*11
DC	45*62*14
DC	45*65*10
DC	45*68*12
DC	45*70*10
DC	45*70*15
DC	45*85*10
DC	45*85*12
DC	45*88.9*19
DC	47.63*69.85*12.7
DC	48*58*10
DC	48*62*8
DC	48*65*12
DC	48*72*11
DC	48*72*15
DC	48*72*17
DC	49.23*68.28*12.7
DC	49.23*69.85*9.53
DC	50*65*10
DC	50*68*8
DC	50*70*8
DC	50*72*10
DC	50*72*13
DC	50*72*15
DC	50*80*13
DC	50*80*15
DC	50*110*12
DC	52*72*12

TYPE	d*D*H
DC	52*85*10
DC	53.98*76.2*12.7
DC	53.97*88.9*25.4
DC	55*75*15
DC	55*80*10
DC	55*100*13
DC	57*85*15
DC	57.15*85.73*17.48
DC	58*80*12
DC	60*80*10
DC	60*80*12
DC	60*90*12
DC	60*95*10
DC	60*110*13
DC	62*80*10
DC	62*85*10
DC	62*90*13
DC	63*80*9
DC	63*90*10
DC	65*82*15
DC	65*85*10
DC	65*85*12
DC	65*90*10
DC	65*90*20
DC	65*100*15
DC	70*90*10
DC	70*90*11
DC	70*90*12
DC	70*90*13
DC	70*92*12 R6
DC	70*95*10
DC	70*100*13
DC	74.63*95.25*9.53
DC	75*90*15
DC	75*95*10
DC	75*95*15.5
DC	75*100*13
DC	76.2*95.25*9.53
DC	76.2*104.78*12.7
DC	80*100*10

TYPE	d*D*H
DC	80*100*12
DC	80*100*14
DC	80*105*12
DC	80*110*13
DC	85*110*13
DC	88.9*114.3*12.7
DC	90*110*12
DC	90*115*13
DC	90*120*12
DC	95*115*13
DC	95*120*12
DC	95*120*13
DC	95*125*15
DC	100*120*12
DC	100*120*13
DC	100*120*14
DC	100*125*13
DC	100*130*12
DC	100*130*13
DC	105*130*12
DC	105*135*16
DC	110*140*11/16
DC	110*150*18
DC	111.13*136.53*9.53
DC	111.13*136.53*12.7
DC	115*145*20
DC	118*140*16
DC	118*150*14
DC	120*150*12
DC	120*150*14
DC	120*150*15
DC	120*150*16
DC	120*165*15
DC	125*150*12
DC	125.43*152.4*12.7
DC	130*160*12
DC	130*160*15
DC	135*160*14
DC	150*180*18
DC	150*190*15

TYPE	d*D*H
DC	160*190*13
DC	160*190*15
DC	160*190*16.5
DC	165*195*13
DC	165*200*15
DC	170*200*15
DC	180*200*15
DC	180*220*15
DC	190*220*18
DC	200*230*12
DC	200*230*15
DC	210*240*15
DC	240*270*15
DC	250*280*15
DC	280*310*15
DC	300*340*18

TYPE	d*D*H

DB型油封 DB Type Seal

由兩個相反方向的密封唇對置組合而成的油封，可隔離兩種密封液體

Assembled by two sealing part in counter direction used to divided two medium.

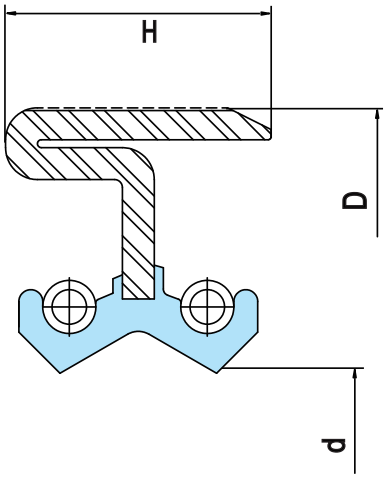

DB型油封规格表 DB Type Seal Size List

TYPE	d*D*H
DB	8*24*7
DB	15*24*7
DB	15*26*7
DB	15*30*7
DB	15.88*25.4*6.35
DB	15.88*28.58*9.53
DB	17*28*6.5
DB	17*28*7
DB	17*28*8
DB	17*30*7
DB	17*33*7
DB	17*35*7
DB	18*32*8
DB	20*31*7
DB	20*35*7

TYPE	d*D*H
DB	20*35*8
DB	25.4*34.92*11.13
DB	28*47*10
DB	28.58*34.92*9.53
DB	28.58*41.28*9.53
DB	30*50*8.5/14.2
DB	32*52*7/9
DB	35*45*10
DB	40*58*10
DB	41.28*49.23*8.74
DB	42.88*63.5*19.05
DB	45*70*15
DB	45*72*12
DB	47.6*73*10
DB	48*70*18

TYPE	d*D*H
DB	50*72*12
DB	50*72*18
DB	50.8*66.68*6.35
DB	52*72*12
DB	55*68*12
DB	55*78*18
DB	58*72*8
DB	60*82*18
DB	62*85*12
DB	62*85*18
DB	63.5*88.9*17.48
DB	65*90*20
DB	68*90*10
DB	72*90*10
DB	90*120*20
DB	100*120*12
DB	110*140*22
DB	120*140*13
DB	120*150*22
DB	122*152*21
DB	125*155*18
DB	130.18*155.58*19.05
DB	140*170*20
DB	158.75*200.02*30.18
DB	160*190*23
DB	160*195*21
DB	190*225*21
DB	200*230*25
DB	200*235*22
DB	210*250*20
DB	232*267*21
DB	245*275*27
DB	252*287*21
DB	280*325*25

TYPE	d*D*H

方向機油封 Power Steering Seal

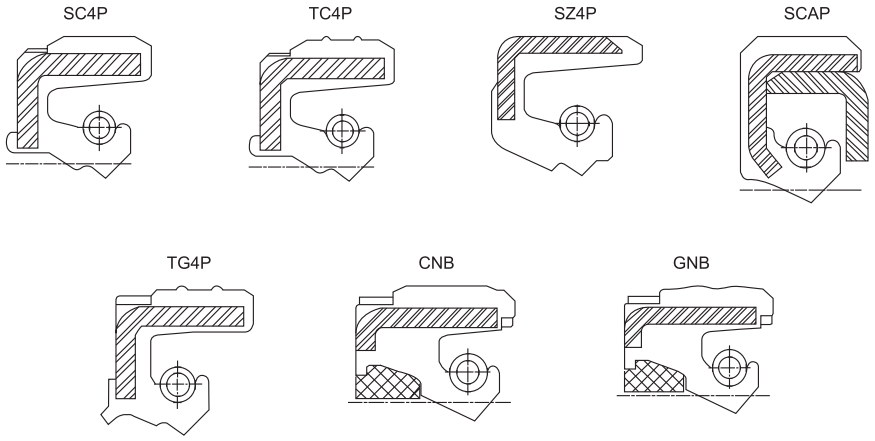

方向機油封規格表 Power Steering Seal Size List

TYPE	DIMENSION
TG4P	18.75*30*5/5.5
TG4P	19*29*7/7.8
TG4P	19*30*6/6.5
TG4P	19*32*6/7
TG4P	19*35*5/5.5
TG4P	20*30*5/6
CNB3	22*32*4/6.5
CNAW11	22*32*7
CNB4	22*35*10/15
GNB7	22*35*10/15
CNB	22*35*8.5
CNB	22*36.6*8
CNAW11	22*38.2*8
CNB1W11	22*38.2*8
GNBW11	22*38.2*8
CNB1	22*38.5*8
GNB3	23*32.5*6/8
CNA	23*34.3*6.6
CNB2	23*34.3/38*3.2/7.4
CNB5	23*34.3/38*3.2/7.4

TYPE	DIMENSION
CNB2	23*34.3/38*3.2/7.4
CNA	23*34.3/38*7.5
CNB2	23*34.3/40.2*3.2/7.5
CNB	23*34.5*7
CNB	23*40*9
CNB	23*41*8
CNB1W11	23*41*8.5
TG4P	23.5*32.5*5/5.5
TG4P	24*33*5/5.5
CNB	24*34*7
CNB	24*36*7
CNB	24*36.20*8
CNB4W11	24*36.5*12
GNB1W11	24*36.5*7.5
CNA	24*36.5*8.5
CNB1W11	24*37*8
CNA	24*37*8.5
CNBW11	24*38.2*8.5
CNB	24*39*8.5
CNA	24*39*8.5/16.5

TYPE	DIMENSION
CNBW11	24*40*7
CNB	24*40*8
CNB1W11	24*40*8
CNA1	24*41*8.5
GNBW11	24*41*8.5
GNB1W11	24*41*8.5
CNBW11	24*41.2*8.5
CNBW11	24*42*8
CNB1	24*42*8
CNB5W11	24*42.5*13/14
CNB1W11	24*43*13
CNB	24*43*9
TG4P	25*34*6/6.5
CNB3	25*35*4/6.5
CNB3	25*35*6.3
CNB	25*35*8
CNB8	25*36*8
CNB1W11	25*37*9
CNB	25*37.5*7
CNB2	25*37.5/41*3.2/7.4
CNB5	25*37.5/41*3.2/7.4
CNB	25*37.6*6.5
CNA	25*37.7/41.85*4.4/7.5
CNB	25*38*7.3
TG4P	25*38*7/7.8
GNB1W11	25*38.2*10
CNB	25*41*8
CNBW11	25*41.2*6.5
CNB1	25*41.5*8
CNBW11	25*42*8.5
GNB1	25*42*8.5
CNB	25*42.5*8
CNBW11	25*42.5*8
CNB	25*43*9
CNB	25*44*8.5
CNBW11	25*44.5*8.5
CNB2	25.3*38/41.2*3.2/7.2
GNB1W11	25.5*42.5*8
CNB4W11	26*38*12
TG4P	26*38*7/7.8

TYPE	DIMENSION
CNB1W11	26*38*8.5
CNB6	26*38*9.5/10.5
CNB10	26*38/40*8.5/17.7
CNB4W11	26*41*12.5
CNB	26*41*8.5
CNB1W11	26*41*8.5
CNB4W11	26*43*12.5
CNB	26*43*8.5
CNB1W11	26*44*8
GNBW11	26*44*8.5
CNB1	26*45*8.5
GNB1W11	26.5*44*8.5
CNB7	27*38*8
CNB1W11	27*40*8.5
CNB	27*41*7
CNB1W11	27*41*8.5
CNB	27*42*8.5
CNBW11	27*42*9.5
CNAW11	27*43*8.5
CNB	27*44*7
CNB1	27*44*8.5
CNB5W11	27*46*13/14
CNB1	27.50*42*8.5
CNB1W11	27.7*38*8.5
CNB1W11	27.7*39*8.5
CNBW11	27.7*40*8.5
CNB1	27.7*41*8.5
CNB4W11	27.7*42*12.5
CNB1	27.7*42*8.5
CNB1W11	27.7*44*8.5
CNB11W11	27.7*44*9/10
CNB1	27.7*45*8.5
CNB5W11	27.7*46*13/14
CNB1	27.7*46*8.5
CNB11W11	27.7*46*9/10
CNB7	28*38*15
CNB1W11	28*38*8.5
CNB7	28*38*9
CNB1W11	28*39*8.5
CNB3	28*40*4/6

TYPE	DIMENSION
CNB11	28*40*7.3/8.5
CNBW11	28*40*8
CNB1W11	28*40*8
CNB4W11	28*41*12.5
CNB	28*41*8
CNB4W11	28*42*12.5
CNB2W11	28*43/47.5*5/12
GNB1W11	28*44*7
CNB	28*44.5*9
CNB1	28*44.5*9
TG4JY	28.6*35.1/38*7.5/14.77
TG4P	29*43*7/7.5
GNB2	29.75*42.5/49*11
CNAW11	30*40*7
CNB7	30*42*17
CNB8	30*42*8
CNB1	30*42*8
GNBW11	30*42.5*8
CNB	30*46*8
CNB	30*47*9
GNBW11	30*48*8
GNB1	30*48*8
GNB	30*49*10
GNB	30*50*10
CNB1	30*50*8.5
CNB11W11	30*50*9/10
CNB7	31*43*15
CNB8	31*43*7
GNB	31*47.5*7.5
GNBW11	31*47.5*7.5
TG4P	32*44*6.5/7
CNB7	32*44.5*7
CNB	32*44.5*8.5
CNBW11	32*46*8.5
CNB1W11	32*46*8.5
CNBW11	32*49*8.5
CNB1W11	32*49*8.5
CNB1W11	32*50*8.5
CNB1	32*53*8.5
CNB	35*50*8

TYPE	DIMENSION

RYT−耐磨導向帶 RYT - Wear Ring

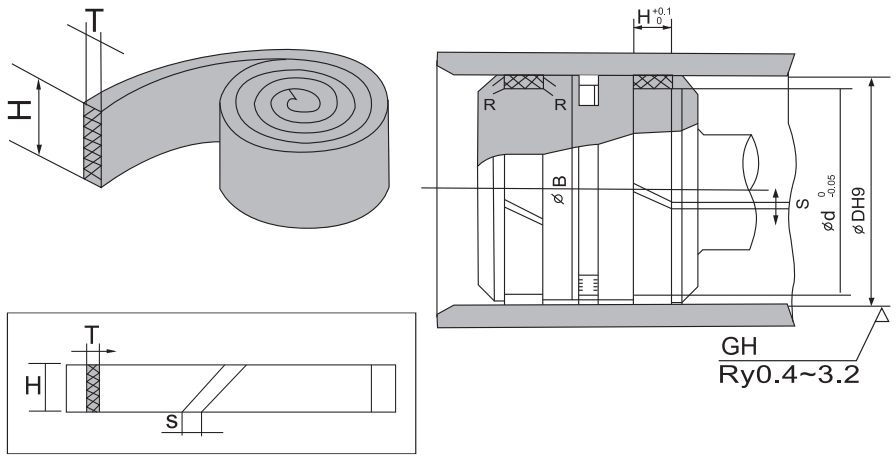

耐磨帶（導向帶） Wear Ring

使用于液壓缸内運行的活塞及活塞杆，耐磨環具有精密的導向作用，并吸收徑向作用力，同時防止缸體内運動部件的金屬接觸。由于使用非金屬的PTFE材料，使其具有良好的耐磨性，抑制機械震動，由于溝槽簡單，安裝簡易，從而使維修成本即可降低。

The function of a hydraulic wear ring is to guide the piston and piston rod of a hydraulic cylinder, absorbing transverse forces. At the same time, it prevents metal-to-metal contact

※非標尺寸可訂制

高度(H)*厚度(T)	高度(H)*厚度(T)	高度(H)*厚度(T)
2.5*2	4.2*2.5	6*2
2.5*2.5	4.2*3	6*2.5
3.2*2	4.2*3.5	6*3
3.2*2.5	4.2*4	6*3.5
4*2	5.6*2	6*4
4*2.5	5.6*2.5	6*4.5
4*3	5.6*3	6*6
4*3.5	5.6*3.5	6.3*2
4*4	5.6*4	6.3*2.5
4.2*2	5.6*4.5	6.3*3

※非標尺寸可訂制

高度(H)*厚度(T)
6.3*3.5
6.3*4
6.3*4.5
6.3*5
6.3*6
8.1*2
8.1*2.5
8.1*3
8.1*3.5
8.1*4
8.1*4.5
8.1*5
8.1*6
9.7*2
9.7*2.5
9.7*3
9.7*3.5
9.7*4
9.7*4.5
9.7*5
9.7*6
10*2
10*2.5
10*3
10*3.5
10*4
10*4.5
10*5
10*6
12*2
12*2.5
12*3
12*3.5
12*4
12*4.5
12*5
12*6
15*2

高度(H)*厚度(T)
15*2.5
15*3
15*3.5
15*4
15*4.5
15*5
15*6
20*2
20*2.5
20*3
20*3.5
20*4
20*4.5
20*5
20*6
25*2
25*2.5
25*3
25*3.5
25*4
25*4.5
25*5
25*6
30*2
30*2.5
30*3
30*3.5
30*4
30*4.5
30*5
30*6
40*2
40*2.5
40*3
40*3.5
40*4
40*4.5
40*5

高度(H)*厚度(T)
40*6
50*2
50*2.5
50*3
50*3.5
50*4
50*4.5
50*5
50*6

GSP-OD SEAL/ 格來圈(孔用)

GSP Type Glyd-ring for Piston

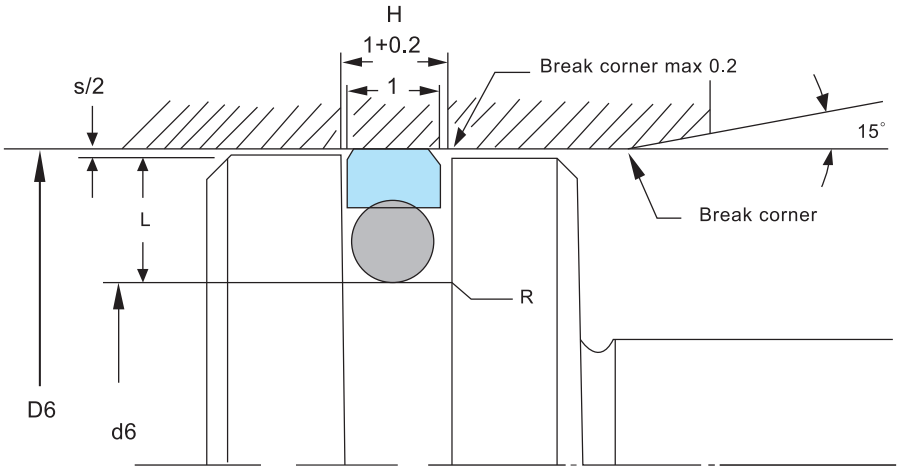

孔用旋轉格來圈是由一個填充PTFE材料組成的動圈和一個提供彈力的橡膠O型圈組成， 用于液壓設備中旋轉運動的密封。旋轉格來圈采用特殊設計， 主要作爲螺旋運動的支軸，或旋轉活塞、活塞杆、傳動軸密封元件。具有低磨擦阻力，無爬行現象， 動、静態密封效果好有潤滑或無潤滑時性能均佳，安裝的溝槽結構簡單，耐高壓，工作條件適應性强。

Glyd ring provides low friction with no stick-slip, minimal break out force and high wear resistance. Main application is actuator cylinders.

技術指標：

工作壓力：高壓可達 70MPa。

綫 速 度：最高15m/s。

Working conditions:

Working pressure: 70 Mpa

Velocity: 15m/s

安裝要求：

1. 要求尖角去毛刺，倒角，安裝密封件時，螺紋牙需要防護，避免損傷密封件。

2. 安裝部位和密封件需保持潔净。

3. 安裝前，須對缸筒、活塞杆及密封件使用潤滑油或潤滑脂，潤滑脂中不得含有固體添加劑。

4. 安裝時，可將四氟環在油或水中加熱至80℃~12℃，使其膨脹，這樣使安裝更爲簡易，四氟環有較好的回復性。

安裝説明：

1. O型圈可直接放入溝槽内，用擴口套沿錐型柱塞推特康環，特康環隨即擴開，要使特康環迅速到達溝槽位置而不是很緩慢。

2. 用收緊套使其恢復到原尺寸。收緊套是有一段長圓錐截面的簡狀物，内徑應與活塞缸筒直徑相同，當特康環通過活塞筒的端面倒角時，也可使起恢復原狀。

3. 安裝工具如擴口套、安裝套、收緊套由合適的塑料、尼龍等材料制成。在許多情况下，特康環在没有這三種工具也可進行，例如用手工或一塑料帶輔助。

D * d * H	D * d * H	D * d * H
8*3*2.2	25*17.5*3.2	40*32.5*3.2
10*5*2.2	25*14*4.2	40*29*4.2
12*7*2.2	26*18.5*3.2	42*31*4.2
14*9*2.2	28*20.5*3.2	45*37.5*3.2
15*10*2.2	28*17*4.2	45*34*4.2
15*7.5*3.2	30*22.5*3.2	48*40.5*3.2
16*11*2.2	30*19*4.2	48*37*4.2
16*8.5*3.2	32*24.5*3.2	50*39*4.2
18*13*2.2	32*21*4.2	50*34.5*6.3
18*10.5*3.2	35*27.5*3.2	52*41*4.2
20*15*2.2	35*24*4.2	52*36.5*6.3
20*12.5*3.2	36*28.5*3.2	55*44*4.2
22*14.5*3.2	36*25*4.2	55*39.5*6.3
24*19*2.2	38*30.5*3.2	56*45*4.2
24*16.5*3.2	38*27*4.2	56*40.5*6.3

D * d * H	D * d * H	D * d * H
60*49*4.2	165*144*8.1	520*495.5*8.1
60*44.5*6.3	170*149*8.1	530*505.5*8.1
63*52*4.2	175*154*8.1	540*515.5*8.1
63*47.5*6.3	180*159*8.1	550*525.5*8.1
64*53*4.2	185*164*8.1	560*535.5*8.1
64*48.5*6.3	190*169*8.1	570*545.5*8.1
65*54*4.2	200*179*8.1	580*555.5*8.1
65*49.5*6.3	210*189*8.1	590*565.5*8.1
70*59*4.2	220*199*8.1	600*575.5*8.1
70*54.5*6.3	225*204*8.1	610*585.5*8.1
75*64*4.2	230*209*8.1	620*595.5*8.1
75*59.5*6.3	240*219*8.1	630*605.5*8.1
80*69*4.2	250*229*8.1	640*615.5*8.1
80*64.5*6.3	260*239*8.1	650*625.5*8.1
85*74*4.2	270*249*8.1	660*635.5*8.1
85*69.5*6.3	275*254*8.1	670*642.5*9.5
90*79*4.2	280*259*8.1	680*652.5*9.5
90*74.5*6.3	290*269*8.1	700*672.5*9.5
95*84*4.2	300*279*8.1	
95*79.5*6.3	310*289*8.1	
100*89*4.2	320*299*8.1	
100*84.5*6.3	330*315.5*8.1	
105*94*4.2	350*325.5*8.1	
105*89.5*6.3	360*335.5*8.1	
110*99*4.2	370*345.5*8.1	
110*94.5*6.3	380*355.5*8.1	
115*99.5*6.3	390*365.5*8.1	
120*104.5*6.3	400*375.5*8.1	
125*109.5*6.3	410*385.5*8.1	
125*104*8.1	420*395.5*8.1	
130*114.5*6.3	430*405.5*8.1	
130*109*8.1	435*410.5*8.1	
135*119.5*6.3	440*415.5*8.1	
135*114*8.1	450*425.5*8.1	
140*124.5*6.3	460*435.5*8.1	
140*119*8.1	470*445.5*8.1	
145*124*8.1	480*455.5*8.1	
150*129*8.1	490*465.5*8.1	
155*134*8.1	500*475.5*8.1	
160*139*8.1	510*485.5*8.1	

GSR−ID SEAL / 格來圈(軸用)
GSR Type Glyd-ring for Rod

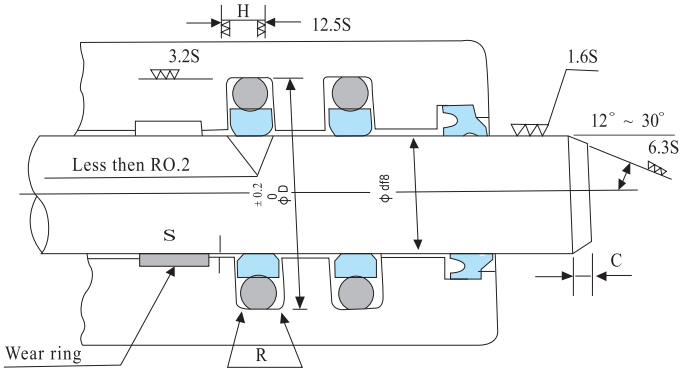

軸用旋轉格來圈是由一個填充PTFE材料制成的動圈和一個提供彈力的橡膠O型圈組成,用于液壓設備中回轉軸活塞杆螺旋運動的支軸密封。由于旋轉格來圈有較大的徑向壓緊力,能承受較高的工作壓力,耐磨損, 能承受大部分介質,抗化學性强的良好性能。

Glyd ring provides low friction with no stick-slip, minimal break out force and high wear resistance. Main application is actuator cylinders.

技術指標:

工作壓力:高壓可達 70MPa。

綫 速 度:最高15m/s。

Working conditions:

Working pressure: 70 Mpa

Velocity: 15m/s

安裝要求:

1.要求尖角去毛刺,倒角,安裝密封件時,螺紋牙需要防護,避免損傷密封件。

2.安裝部位和密封件需保持潔净。

3.安裝前,須對缸筒、活塞杆及密封件使用潤滑油或潤滑脂,潤滑脂中不得含有固體添加劑。

4.安裝時,可將四氟環在油或水中加熱至80℃~12℃,使其膨脹,這樣使安裝更爲簡易,四氟環有較好的回復性。

安裝説明：

1. 先將O型圈放入溝槽内， 同時按壓特康環， 但要小心防止它折斷。

2. 把受壓狀態的特康環放在O型圈上，在用一個圓棒（帶有的10–15°）按箭頭方向展平特康環使其恢復原尺寸。

D * d * H	D * d * H	D * d * H
4*8.9*2.2	45*56*4.2	150*165.5*6.3
5*9.9*2.2	45*60.5*6.3	155*170.5*6.3
6*10.9*2.2	48*63.5*6.3	160*175.5*6.3
8*15.5*3.2	50*61*4.2	160*181*8.1
10*17.5*3.2	50*65.5*6.3	165*180.5*6.3
12*17*2.2	52*67.5*6.3	170*185.5*6.3
12*19.5*3.2	55*66*4.2	180*195.5*6.3
14*19*2.2	55*70.5*6.3	180*201*8.1
14*21.5*3.2	56*67*4.2	190*205.5*6.3
15*22.5*3.2	56*71.5*6.3	200*221*8.1
16*23.5*3.2	60*71*4.2	210*231*8.1
18*25.5*3.2	60*75.5*6.3	220*241*8.1
19*30*4.2	63*74*4.2	230*251*8.1
20*27.5*3.2	63*78.5*6.3	240*261*8.1
20*31*4.2	65*80.5*6.3	250*271*8.1
22*29.5*3.2	70*85.5*6.3	260*284.5*8.1
22*33*4.2	75*90.5*6.3	270*294.5*8.1
25*32.5*3.2	80*95.5*6.3	280*304.5*8.1
25*36*4.2	85*100.5*6.3	290*314.5*8.1
28*39*4.2	90*105.5*6.3	300*324.5*8.1
30*41*4.2	95*110.5*6.3	310*334.5*8.1
32*43*4.2	100*115.5*6.3	320*344.5*8.1
35*46*4.2	105*120.5*6.3	340*364.5*8.1
36*47*4.2	110*125.5*6.3	350*374.5*8.1
38*49*4.2	115*130.5*6.3	360*384.5*8.1
38*53.5*6.3	120*135.5*6.3	370*394.5*8.1
40*51*4.2	125*140.5*6.3	380*404.5*8.1
40*55.5*6.3	130*145.5*6.3	390*414.5*8.1
42*53*4.2	140*155.5*6.3	400*424.5*8.1
42*57.5*6.3	145*160.5*6.3	410*434.5*8.1

D * d * H	D * d * H	D * d * H
420*444.5*8.1		
430*454.5*8.1		
440*464.5*8.1		
450*474.5*8.1		
460*484.5*8.1		
470*494.5*8.1		
480*504.5*8.1		
490*514.5*8.1		
500*524.5*8.1		
510*534.5*8.1		
520*544.5*8.1		
530*554.5*8.1		
540*564.5*8.1		
550*574.5*8.1		
560*584.5*8.1		
580*604.5*8.1		
600*624.5*8.1		
610*634.5*8.1		
620*644.5*8.1		
630*654.5*8.1		
640*664.5*8.1		
650*678*9.5		
660*688*9.5		
670*698*9.5		
680*708*9.5		
690*718*9.5		
700*728*9.5		

液壓單模塊活塞密封
Hydraulic Complete Piston Seal

容易安装，可以替代多密封活塞件，是低成本解決方案。常應用於（低載荷）低壓液壓油缸。

An easy to install and economic solution

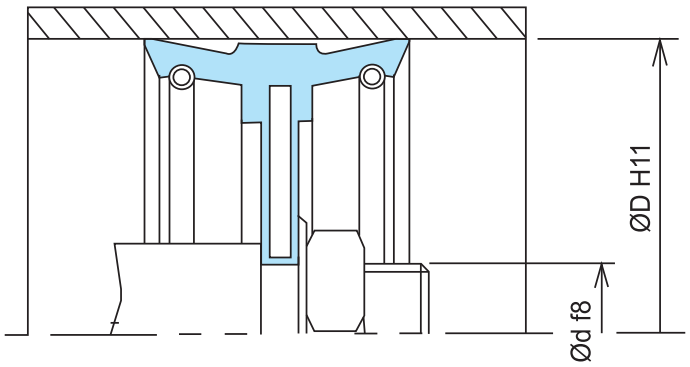

液壓單模塊活塞密封規格表
Hydraulic Complete Piston Seal Size List

TYPE	d*D*H
PMH	8*26*22
PMH	8*30*22
PMH	8*35*22
PMH	8.2*35*26
PMH	8*35*26
PMH	10*40*22
PMH	10*40*25
PMH	10*45*22
PMH	10*45*25
PMH	10*50*25
PMH	10*55*25
PMH	12*60*26
PMH	12*63*25
PMH	12*70*30
PMH	12*80*30

TYPE	d*D*H
PMH	12*100*35
PMH	12*110*40
PMH	20*115*30
PMH	20*120*40
PMH	20*125*40
PMH	20*140*40
PMH	20*150*40
PMH	20*160*40
PMH	20*180*40
PMH	20*200*40
PMH	30*250*40
PMH	35*300*40
PMH	60*300*40

汽動用單模塊活塞密封
Pneumatic Complete Piston Seal

容易安裝，可以替代多密封活塞件，是低成本解決方案。常應用於（低載荷）低壓液壓油缸。

An easy to install and economic solution

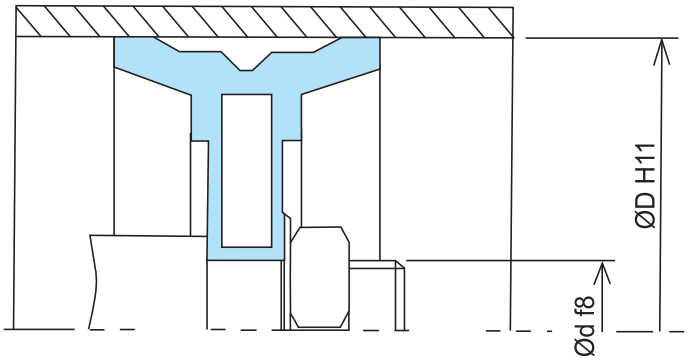

汽動用單模塊活塞密封規格表
Pneumatic Complete Piston Seal Size List

TYPE	d*D*H
PMP	8*25*12
PMP	8*32*15
PMP	10*40*18
PMP	10*50*18
PMP	8*50*18
PMP	10*55*25
PMP	12*63*22
PMP	16*63*22
PMP	12*70*22
PMP	16*80*25
PMP	16*90*25
PMP	16*100*25
PMP	18*110*25
PMP	20*125*26
PMP	20*125*30

TYPE	d*D*H
PMP	20*140*30
PMP	20*150*30
PMP	27*160*31
PMP	27*180*31
PMP	27*200*35
PMP	30*250*35

APA系列（空壓用）Pneumatic Seal （APA）

APA型是一種小型雙作用汽缸活塞密封件。具有較好的摩擦特性和獨特的斷面設計可避免扭轉損壞。用於標準汽缸，小直徑汽缸以及薄型汽缸。工作壓力不大於10BAR，溫度在於-35~120℃，表面速度≤1m/s。

A double acting complete piston seal with performance against twisting and rolling with maximum working pressure 10 bar and maximum working temperature from -35℃ to 120℃, velocity is within 1 m/s

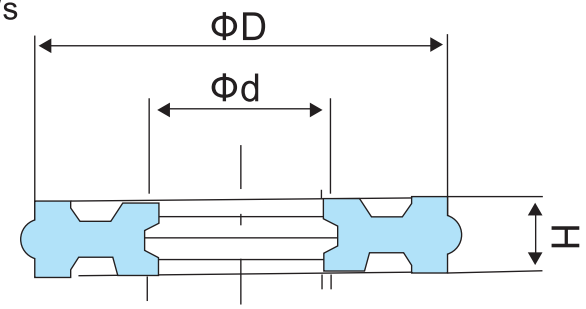

TYPE	d*D*H
APA	5.4*10*1.7
APA	7.4*12*1.7
APA	10.4*15*1.7
APA	11.4*16*1.7
APA	14*20*2.2
APA	17*25*3
APA	22*30*3
APA	24*32*3
APA	30*38*3
APA	32*40*3
APA	36*44*3
APA	40*50*3.8
APA	46*56*3.8
APA	50*60*3.8
APA	53*63*3.8
APA	55*70*5.7
APA	60*75*5.7
APA	65*82*5.7
APA	70*85*5.7
APA	75*90*5.7

TYPE	d*D*H
APA	80*95*5.7
APA	85*100*5.7
APA	95*110*5.7
APA	100*115*5.74
APA	105*120*5.7
APA	110*125*5.7
APA	115*130*5.7
APA	125*140*5.7
APA	135*150*5.7
APA	140*160*5.7
APA	155*175*7.7
APA	160*180*7.7
APA	180*200*7.7
APA	230*250*7.7
APA	280*300*7.7

PSD系列（空壓用）Pneumatic Seal （PSD）

PSD型是雙作用汽缸活塞密封件，用於標準汽缸，小直徑汽缸以及薄型汽缸工作壓力≤10 BAR，溫度在於-20~80℃，表面速度≤1m/s。

A double acting piston seal with maximum working pressure 10 bar and maximum working temperature from -20℃ to 80℃.

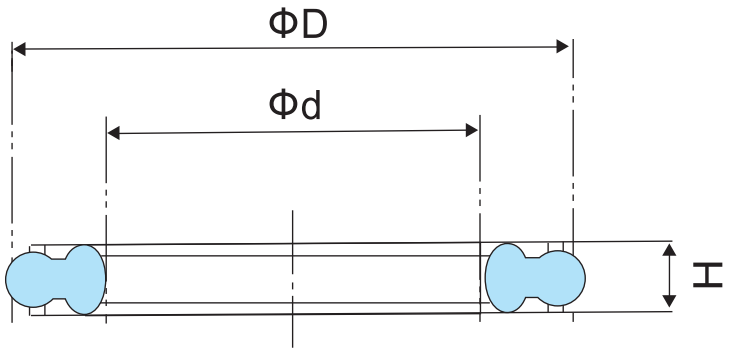

TYPE	d*D*H
PSD	5.4*10*1.6
PSD	7.4*12*1.6
PSD	10.4*15*1.6
PSD	11.4*16*1.6
PSD	14*20*2.24
PSD	17*25*3
PSD	22*30*3
PSD	24*32*3
PSD	30*38*3
PSD	32*40*3
PSD	36*44*3
PSD	40*50*3.8
PSD	46*56*3.8
PSD	50*60*3.8
PSD	53*63*3.8
PSD	55*70*5.6
PSD	60*75*5.6
PSD	65*80*5.6
PSD	70*85*5.6
PSD	75*90*5.6

TYPE	d*D*H
PSD	80*95*5.6
PSD	85*100*5.6
PSD	95*110*5.6
PSD	100*115*5.6
PSD	105*120*5.6
PSD	110*125*5.6
PSD	115*130*5.6
PSD	125*140*5.6
PSD	135*150*5.6
PSD	140*160*7.6
PSD	155*175*7.6
PSD	160*180*7.6
PSD	180*200*7.6
PSD	230*250*7.6
PSD	280*300*7.6

APG系列（空壓用）Pneumatic Seal （APG）

APG 型一種小型雙作用汽缸活塞密封件，工作壓力≤10BAR，溫度在於-35-120℃，表面速度≤0.3。

Insertable dust seals with a large profile for both outdoor and indoor applications.

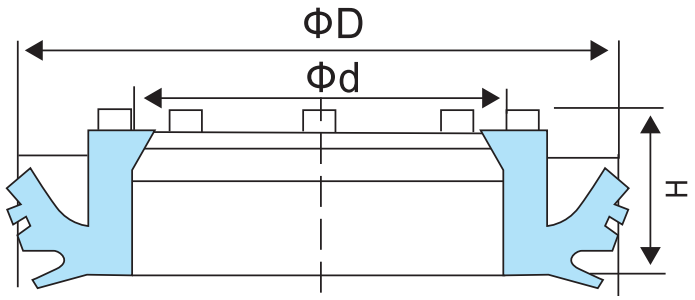

TYPE	d*D*H
APG	12*20*5.7
APG	17*25*5.7
APG	20*28*5.7
APG	22.4*30*5.7
APG	24*32*5.7
APG	30*40*7.1
APG	40*50*7.1
APG	52*63*7.1
APG	70*80*7.1
APG	85*100*10.1
APG	110*125*10.1
APG	125*140*10.1
APG	135*150*10.1
APG	145*160*10.1
APG	165*180*10.1
APG	180*200*13.1
APG	230*250*13.1
APG	280*300*15.1

TYPE	d*D*H

MYA系列（空壓用）Pneumatic Seal （MYA）

MYA型可用於活塞和活塞桿密封這類密封件具有很小的截面可用於小型汽缸閥密封。工作壓力≤8bar，工作溫度：-25~70℃，表面速度≤0.4。

Packings for small-gauge pneumatic applications

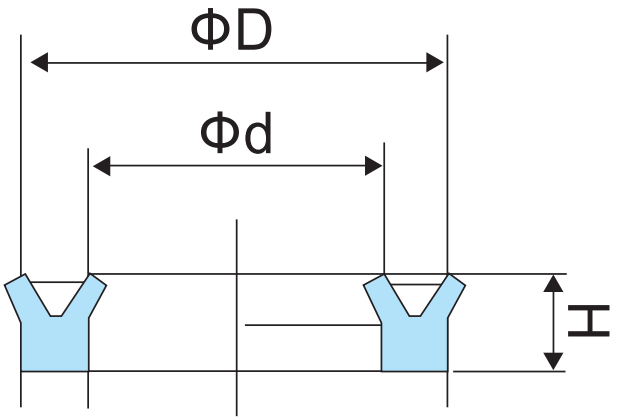

TYPE	d*D*H
MYA	3*6*2.1
MYA	4*7*2.1
MYA	5*8*2.1
MYA	6*9*2.1
MYA	7*10*2.1
MYA	8*11*2.1
MYA	9*12*2.1
MYA	10*13*2.1
MYA	10*14*2.8
MYA	11*15*2.8
MYA	11.2*15.2*2.8
MYA	12*16*2.8
MYA	12.5*16.5*2.8
MYA	14*18*2.8
MYA	15*19*2.8

TYPE	d*D*H
MYA	16*20*2.8
MYA	18*22*2.8
MYA	20*24*2.8
MYA	21*25*2.8
MYA	22*26*2.8
MYA	24*30*4.2
MYA	34*40*4.2

SDR系列（空壓用）Pneumatic Seal （SDR）

SDR 型是雙作用的防塵圈，工作溫度：－25～100℃，表面速度≤1。

Common dust seals insertable in cylinders for indoor applications.

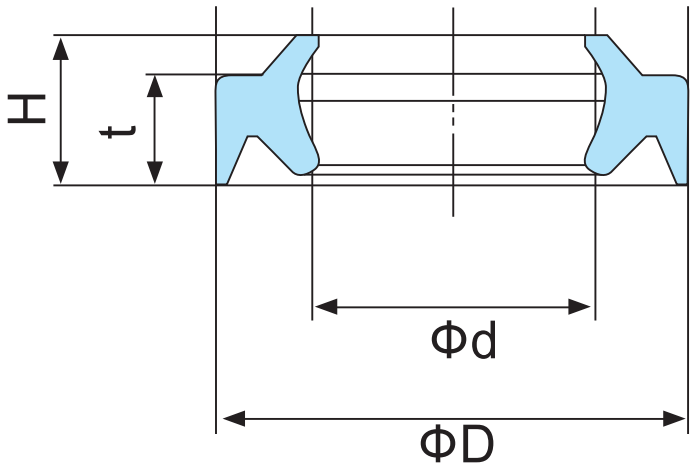

TYPE	d*D*t/H
SDR	12*20*4.5*6.0
SDR	12.5*20.5*4.5*6.0
SDR	14*22*4.5*6.0
SDR	16*24*4.5*6.0
SDR	18*26*4.5*6.0
SDR	19*27*4.5*6.0
SDR	20*28*4.5*6.0
SDR	22*30*4.5*6.0
SDR	22.4*30.4*4.5*6.0
SDR	25*33*4.5*6.0
SDR	25.4*33.4*4.5*6.0
SDR	26*34*4.5*6.0
SDR	28*36*4.5*6.0
SDR	30*38*5.0*6.5
SDR	31.5*39.5*5.0*6.5

TYPE	d*D*t/H
SDR	32*40*5.0*6.5
SDR	35*43*50*6.5
SDR	35.5*43.5*5.0*6.5
SDR	36*44*5.0*6.5
SDR	38*46*5.0*6.5
SDR	40*48*5.0*6.5
SDR	45*53*5.0*6.5
SDR	50*58.5.0*6.5
SDR	53*61*5.0*6.5
SDR	55*63*5.0*6.5
SDR	56*64*5.0*6.5
SDR	60*68*5.0*6.5
SDR	63*71*5.0*6.5
SDR	65*73*5.0*6.5
SDR	67*75*5.0*6.5

PDU系列（空壓用）Pneumatic Seal （PDU）

本產品適用於往復用氣動元件中, 以空氣為介質, 該產品外形尺寸窄小, 窄端面防塵，軸用密封的雙唇密封組合圈, 適用於薄型氣缸。工作壓力≤10Bpa，工作溫度：-20～80℃，表面速度≤1。

PDU-packings, the one-piece packing & wiper, allow compacter cylinder designs.

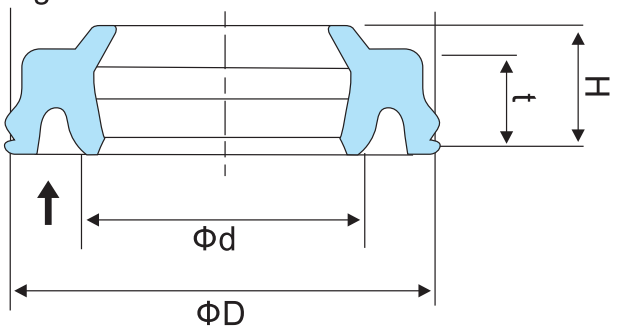

TYPE	d*D*t/H
PDU	6*10*3*4.4
PDU	8*12.*3.5*4.7
PDU	10*14*3.5*4.7
PDU	12*16*3.5*4.7
PDU	14*18*3.5*4.7
PDU	16*24*3.5*7.3
PDU	20*28*5.5*7.3
PDU	25*33*5.5*7.3
PDU	30*40*6.5*8.5
PDU	32*42*6.5*8.5
PDU	35*45*6.5*8.5
PDU	36*46*6.5*8.5
PDU	40*50*6.5*8.5
PDU	45*55*6.5*8.5

TYPE	d*D*t/H

SKY系列油封 SKY Seal

SKY 型可用與活塞和活塞桿密封，工作壓力 ≤120 Bar，工作溫度：-25-220℃。

Flexible and easy installing properties fit to one piece groove and eliminate parts of divided grooves. Compacter cylinder design with lower cost is achievable by SKY packings.

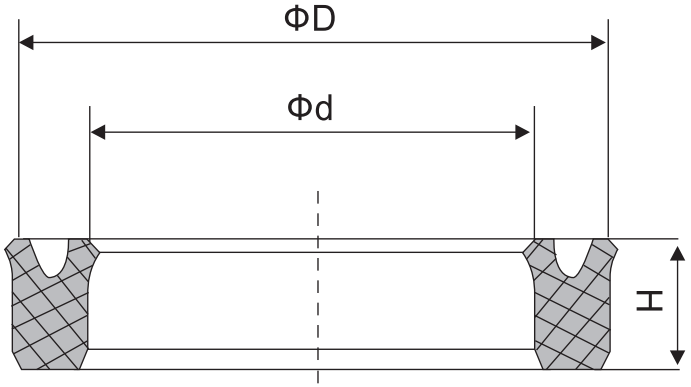

TYPE	d*D*H
SKY	10*18*5
SKY	12*20*5
SKY	12.5*20*5
SKY	14*22*5
SKY	16*24*5
SKY	17*25*5
SKY	18*26*5
SKY	20*28*5
SKY	20*30*5
SKY	22*30*5
SKY	22.4*30*5
SKY	23.5*31.5*5
SKY	24*32*5
SKY	25*33*5
SKY	26*34*5
SKY	27*35*5
SKY	28*35.5*5
SKY	28*36*5
SKY	30*38*5
SKY	30*40*6

TYPE	d*D*H
SKY	31.5*41.5*6
SKY	32*42*6
SKY	34*44*6
SKY	35*45*6
SKY	35.5*45*6
SKY	35.5*45.5*6
SKY	36*46*6
SKY	38*48*6
SKY	40*50*6

軸向VA型密封件 VA Seal

VA型密封圈安裝在軸上并隨軸一同運轉,錐形密封唇可防止角度的偏移，防止外界的雜污進入和内部油脂等的泄漏，中間的連接部位可保證密封唇運動的持久并對表面産生輕微壓力。

VA型密封圈是最常用的截面,VA型可用作軸徑從3mm到1200mm的標準密封。整個直徑範圍分成9種截面尺寸,直徑達2000mm的大直徑密封圈可用幾個弓形環對接硫化制造。

主要特性是其軸向作用的密封唇，起有較好的活動性和隨附性，可補償較大的公差和角度偏差，因此可形成軸向密封作用。

VS seal are mounted and rotate with the shaft to protect bearing and oil seal from dirt and other media

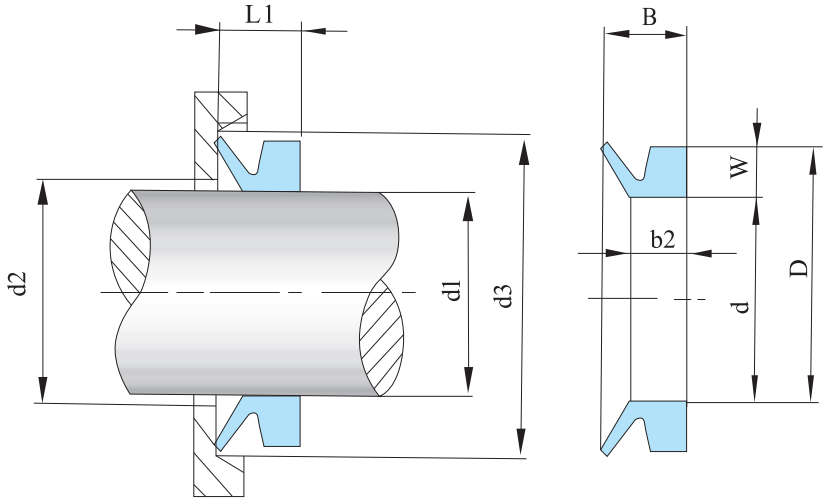

VA型油封規格表 VA Type Size List

TYPE	軸徑範圍 d1	内徑 d	切面高度 W	寬度 b2	寬度 B	最大直徑 d2	最小直徑 d3	安裝寬度 L1
VA-003	2.7-3.5	2.5	1.5	2.1	3	d1+1	d1+4	2.5±0.3
VA-004	3.5-4.5	3.2	2	2.4	3.7	d1+1	d1+6	3±0.4
VA-005	4.5-5.5	4	2	2.4	3.7	d1+1	d1+6	3±0.4
VA-006	5.5-6.5	5	2	2.4	3.7	d1+1	d1+6	3±0.4
VA-007	6.5-8	6	2	2.4	3.7	d1+1	d1+6	3±0.4

TYPE	軸徑範圍 d1	內徑 d	切面高度 W	寬度 b2	寬度 B	最大直徑 d2	最小直徑 d3	安裝寬度 L1
VA-008	8-9.5	7	2	2.4	3.7	d1+1	d1+6	3±0.4
VA-010	9.5-11.5	9	3	3.4	5.5	d1+1	d1+9	4.5±0.6
VA-012	11.5-12.5	10.5	3	3.4	5.5	d1+1	d1+9	4.5±0.6
VA-013	12.5-13.5	11.7	3	3.4	5.5	d1+1	d1+9	4.5±0.6
VA-014	13.5-15.5	12.5	3	3.4	5.5	d1+1	d1+9	4.5±0.6
VA-016	15.5-17	14	3	3.4	5.5	d1+1	d1+9	4.5±0.6
VA-018	17.5-19	16	3	3.4	5.5	d1+1	d1+9	4.5±0.6
VA-020	19-21	18	4	4.7	7.5	d1+2	d1+12	6±0.8
VA-022	21-24	20	4	4.7	7.5	d1+2	d1+12	6±0.8
VA-025	24-27	22	4	4.7	7.5	d1+2	d1+12	6±0.8
VA-028	27-29	25	4	4.7	7.5	d1+2	d1+12	6±0.8
VA-030	29-31	27	4	4.7	7.5	d1+2	d1+12	6±0.8
VA-032	31-33	29	4	4.7	7.5	d1+2	d1+12	6±0.8
VA-035	33-36	31	4	4.7	7.5	d1+2	d1+12	6±0.8
VA-038	36-38	34	4	4.7	7.5	d1+2	d1+12	6±0.8
VA-040	38-43	36	5	5.5	9	d1+2	d1+15	7±1
VA-045	43-48	40	5	5.5	9	d1+2	d1+15	7±1
VA-050	48-53	45	5	5.5	9	d1+2	d1+15	7±1
VA-055	53-58	49	5	5.5	9	d1+2	d1+15	7±1
VA-060	58-63	54	5	5.5	9	d1+2	d1+15	7±1
VA-065	63-68	58	5	5.5	9	d1+2	d1+15	7±1
VA-070	68-73	63	6	6.8	11	d1+3	d1+18	9±1.2
VA-075	73-78	67	6	6.8	11	d1+3	d1+18	9±1.2
VA-080	78-83	72	6	6.8	11	d1+3	d1+18	9±1.2
VA-085	83-88	76	6	6.8	11	d1+3	d1+18	9±1.2
VA-090	88-93	81	6	6.8	11	d1+3	d1+18	9±1.2
VA-095	93-98	85	6	6.8	11	d1+3	d1+18	9±1.2
VA-100	98-105	90	6	6.8	11	d1+3	d1+18	9±1.2
VA-110	105-115	99	7	7.9	12.8	d1+4	d1+21	10.5±1.5
VA-120	115-125	108	7	7.9	12.8	d1+4	d1+21	10.5±1.5
VA-130	125-135	117	7	7.9	12.8	d1+4	d1+21	10.5±1.5
VA-140	135-145	126	7	7.9	12.8	d1+4	d1+21	10.5±1.5
VA-150	145-155	135	7	7.9	12.8	d1+4	d1+21	10.5±1.5
VA-160	155-165	144	8	9	14.5	d1+4	d1+24	12±1.8
VA-170	165-175	153	8	9	14.5	d1+4	d1+24	12±1.8
VA-180	175-185	162	8	9	14.5	d1+4	d1+24	12±1.8
VA-190	185-195	171	8	9	14.5	d1+4	d1+24	12±1.8
VA-199	195-210	180	8	9	14.5	d1+4	d1+24	12±1.8
VA-200	190-210	180	15	14.3	25	d1+10	d1+45	20±4
VA-220	210-235	198	15	14.3	25	d1+10	d1+45	20±4

TYPE	軸徑範圍 d1	內徑 d	切面高度 W	寬度 b2	寬度 B	最大直徑 d2	最小直徑 d3	安裝寬度 L1
VA-250	235-265	225	15	14.3	25	d1+10	d1+45	20±4
VA-275	265-290	247	15	14.3	25	d1+10	d1+45	20±4
VA-300	290-310	270	15	14.3	25	d1+10	d1+45	20±4
VA-325	310-335	292	15	14.3	25	d1+10	d1+45	20±4
VA-350	335-365	315	15	14.3	25	d1+10	d1+45	20±4
VA-375	365-390	337	15	14.3	25	d1+10	d1+45	20±4
VA-400	390-430	360	15	14.3	25	d1+10	d1+45	20±4
VA-450	430-480	405	15	14.3	25	d1+10	d1+45	20±4
VA-500	480-530	450	15	14.3	25	d1+10	d1+45	20±4
VA-550	530-580	495	15	14.3	25	d1+10	d1+45	20±4
VA-600	580-630	540	15	14.3	25	d1+10	d1+45	20±4
VA-650	630-665	600	15	14.3	25	d1+10	d1+45	20±4
VA-700	665-705	630	15	14.3	25	d1+10	d1+45	20±4
VA-725	705-745	670	15	14.3	25	d1+10	d1+45	20±4
VA-750	745-785	705	15	14.3	25	d1+10	d1+45	20±4
VA-800	785-830	745	15	14.3	25	d1+10	d1+45	20±4
VA-850	830-875	785	15	14.3	25	d1+10	d1+45	20±4
VA-900	875-920	825	15	14.3	25	d1+10	d1+45	20±4
VA-950	920-965	865	15	14.3	25	d1+10	d1+45	20±4
VA-1000	965-1015	910	15	14.3	25	d1+10	d1+45	20±4
VA-1050	1015-1065	955	15	14.3	25	d1+10	d1+45	20±4
VA-1100	1065-1115	1000	15	14.3	25	d1+10	d1+45	20±4
VA-1150	1115-1165	1045	15	14.3	25	d1+10	d1+45	20±4
VA-1200	1165-1215	1090	15	14.3	25	d1+10	d1+45	20±4
VA-1250	1215-1270	1135	15	14.3	25	d1+10	d1+45	20±4
VA-1300	1270-1320	1180	15	14.3	25	d1+10	d1+45	20±4
VA-1350	1320-1370	1225	15	14.3	25	d1+10	d1+45	20±4
VA-1400	1370-1420	1270	15	14.3	25	d1+10	d1+45	20±4
VA-1450	1420-1470	1315	15	14.3	25	d1+10	d1+45	20±4
VA-1500	1470-1520	1360	15	14.3	25	d1+10	d1+45	20±4
VA-1550	1520-1570	1405	15	14.3	25	d1+10	d1+45	20±4
VA-1600	1570-1620	1450	15	14.3	25	d1+10	d1+45	20±4
VA-1650	1620-1670	1495	15	14.3	25	d1+10	d1+45	20±4
VA-1700	1670-1720	1540	15	14.3	25	d1+10	d1+45	20±4
VA-1750	1720-1770	1585	15	14.3	25	d1+10	d1+45	20±4
VA-1800	1770-1820	1630	15	14.3	25	d1+10	d1+45	20±4
VA-1850	1820-1870	1675	15	14.3	25	d1+10	d1+45	20±4
VA-1900	1870-1920	1720	15	14.3	25	d1+10	d1+45	20±4
VA-1950	1920-1970	1765	15	14.3	25	d1+10	d1+45	20±4
VA-2000	1970-2020	1810	15	14.3	25	d1+10	d1+45	20±4

軸向VS型密封件: VS Seal

VS型密封圈安裝在軸上并隨軸一同運轉,錐形密封唇可防止角度的偏移,防止外界的雜污進入和内部油脂等的泄漏,中間的連接部位可保證密封唇運動的持久并對表面産生輕微壓力。

VS型密封唇的幾何形狀和VA型的一致。密封本體在背部用一斜面延伸而得到了加强,因此安裝寬度約增大50%。密封本體的加强加大了在較高圓周速度或受到外力作用時密封件相對于軸的粘着力，同時，背部的機何形狀是一種能獲得高速下軸向和徑向密封的廉價的解決方案。

主要特性是其軸向作用是密封唇，起有較好的活動性和適應性，可補償較大的公差和角度偏差，因此可形成軸向密封作用。

VS seal are mounted and rotate with the shaft to protect bearing and oil seal from dirt and other media

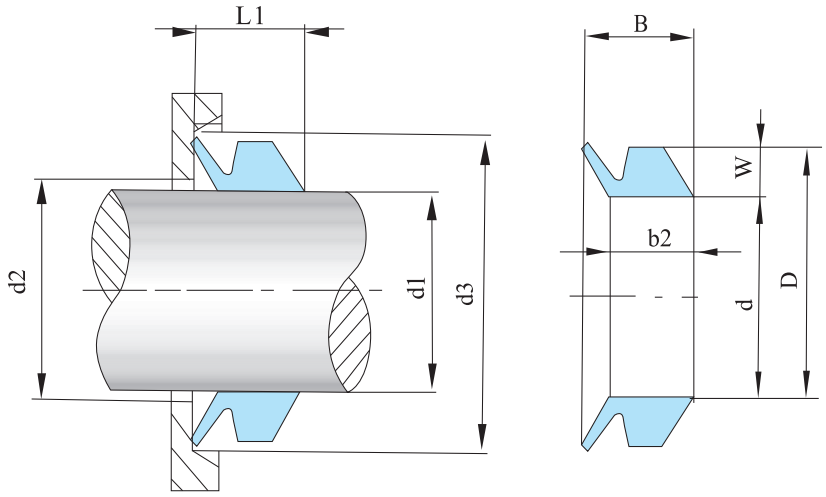

VS型油封規格表 VS Type Size List

TYPE	軸徑範圍 d1	内徑 d	切面高度 W	寬度 b2	寬度 B	最大直徑 d2	最小直徑 d3	安裝寬度 L1
VS-005	4.5-5.5	4	2	3.9	5.2	d1+1	d1+6	4.5±0.4
VS-006	5.5-6.5	5	2	3.9	5.2	d1+1	d1+6	4.5±0.4
VS-007	6.5-8	6	2	3.9	5.2	d1+1	d1+6	4.5±0.4
VS-008	8-9.5	7	2	3.9	5.2	d1+1	d1+6	4.5±0.4
VS-010	9.5-11.5	9	3	5.6	7.7	d1+1	d1+9	6.7±0.6

TYPE	軸徑範圍 d1	內徑 d	切面高度 W	寬度 b2	寬度 B	最大直徑 d2	最小直徑 d3	安裝寬度 L1
VS-012	11.5-13.5	10.5	3	5.6	7.7	d1+1	d1+9	6.7±0.6
VS-014	13.5-15.5	12.5	3	5.6	7.7	d1+1	d1+9	6.7±0.6
VS-016	15.5-17.5	14	3	5.6	7.7	d1+1	d1+9	6.7±0.6
VS-018	17.5-19	16	3	5.6	7.7	d1+1	d1+9	6.7±0.6
VS-020	19-21	18	4	7.9	10.5	d1+1	d1+12	9±0.8
VS-022	21-24	20	4	7.9	10.5	d1+I	d1+12	9±0.8
VS-025	24-27	22	4	7.9	10.5	d1+1	d1+12	9±0.8
VS-028	27-29	25	4	7.9	10.5	d1+1	d1+12	9±0.8
VS-030	29-31	27	4	7.9	10.5	d1+1	d1+12	9±0.8
VS-032	31-33	29	4	7.9	10.5	d1+1	d1+12	9±0.8
VS-035	33-36	31	4	7.9	10.5	d1+1	d1+12	9±0.8
VS-038	36-38	34	4	7.9	10.5	d1+1	d1+12	9±0.8
VS-040	38-43	36	5	9.5	13	d1+2	d1+15	11±1
VS-045	43-48	40	5	9.5	13	d1+2	d1+15	11±1
VS-050	48-53	45	5	9.5	13	d1+2	d1+15	11±1
VS-055	53-58	49	5	9.5	13	d1+2	d1+15	11±1
VS-060	58-63	54	5	9.5	13	d1+2	d1+15	11±1
VS-065	63-68	58	5	9.5	13	d1+2	d1+15	11±1
VS-070	68-73	63	6	11.3	15.5	d1+3	d1+18	13.5±1.2
VS-075	73-78	67	6	11.3	15.5	d1+3	d1+18	13.5±1.2
VS-080	78-83	72	6	11.3	15.5	d1+3	d1+18	13.5±1.2
VS-085	83-88	76	6	11.3	15.5	d1+3	d1+18	13.5±1.2
VS-090	88-93	81	6	11.3	15.5	d1+3	d1+18	13.5±1.2
VS-095	93-98	85	6	11.3	15.5	d1+3	d1+18	13.5±1.2
VS-100	98-105	90	6	11.3	15.5	d1+3	d1+18	13.5±1.2
VS-110	105-115	99	7	13.1	18	d1+4	d1+21	15.5±1.5
VS-120	115-125	108	7	13.1	18	d1+4	d1+21	15.5±1.5
VS-130	125-135	117	7	13.1	18	d1+4	d1+21	15.5±1.5
VS-140	135-145	126	7	13.1	18	d1+4	d1+21	15.5±1.5
VS-150	145-155	135	7	13.1	18	d1+4	d1+21	15.5±1.5
VS-160	155-165	144	8	15	20.5	d1+4	d1+24	18±1,8
VS-170	165-175	153	8	15	20.5	d1+4	d1+24	18±1.8
VS-180	175-185	162	8	15	20.5	d1+4	d1+24	18±1.8
VS-190	185-195	171	8	15	20.5	d1+4	d1+24	18±1.8
VS-199	195-210	180	8	15	20.5	d1+4	d1+24	18±1.8

華司油封804系列（組合墊圈）804 Bonded Seal

專用的油管用密封圈，橡膠密封環的外面用防銹金屬環包圍，無需特別加工密封槽位置，是快速和自動化安裝的理想配件。

A static seal used as a sealing ring fitted under the bolt head and nut, the self-centered rubber part provides good sealing stability and the metal part limits the compression

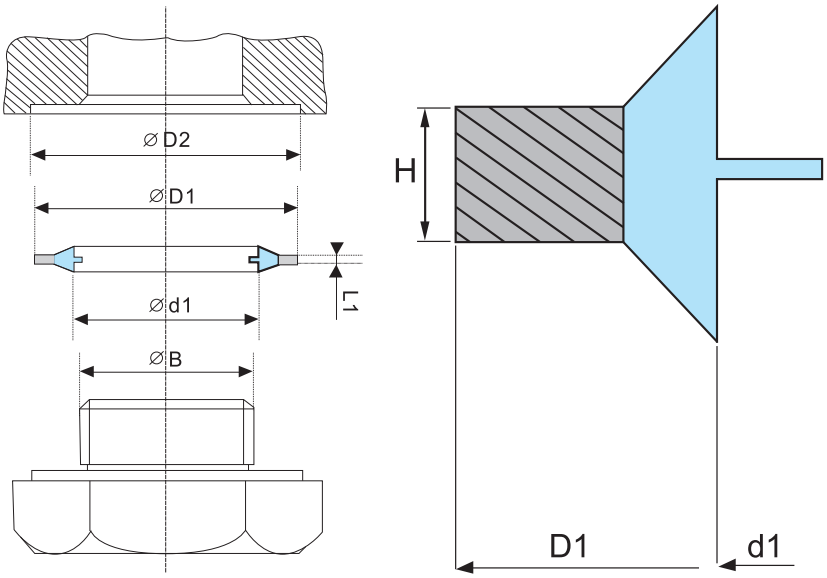

華司油封804系列規格表
Bonded Seal 804 Type Size List

TYPE	SIZE
804	4.5*7*1
804	6.7*11*1
804	7.6*18*1
804	8.7*14*1
804	9.9*16*1.5
804	9.9*22*1.5
804	10.37*15.88*2.03
804	10.4*14.7*1.25
804	10.45*19*2
804	10.6*20.5*1.5

TYPE	SIZE
804	10.7*16*1.5
804	10.7*18*1.5
804	12*20*1.5
804	12.7*19*1.5
804	12.7*20*1.5
804	13*24*1.5
804	13.74*20.57*2.03
804	14*22*1.5
804	14.5*23*2
804	14.7*22*1.5

TYPE	SIZE
804	16.7*24*1.5
804	17.28*23.8*2.03
804	17.36*22.7*1.25
804	18.6*26*1.6
804	18.7*26*1.5
804	20.7*28*1.5
804	21.54*28.58*2.5
804	21.55*26.7*1.25
804	22.7*30*2
804	23.5*28.7*2
804	24.5*34*2
804	24.7*32*2
804	27.05*34.93*2.5
804	27.2*36*2
804	30.81*38.1*2.5
804	31*39*2
804	33.89*42.8*3.25
804	42.7*53*2

華司油封800系列（組合墊圈）800 Bonded Seal

專用的油管用密封圈，橡膠密封環的外面用防銹金屬環包圍，無需特別加工密封槽位置，是快速和自動化安裝的理想配件。

A static seal used as a sealing ring fitted under the bolt head and nut

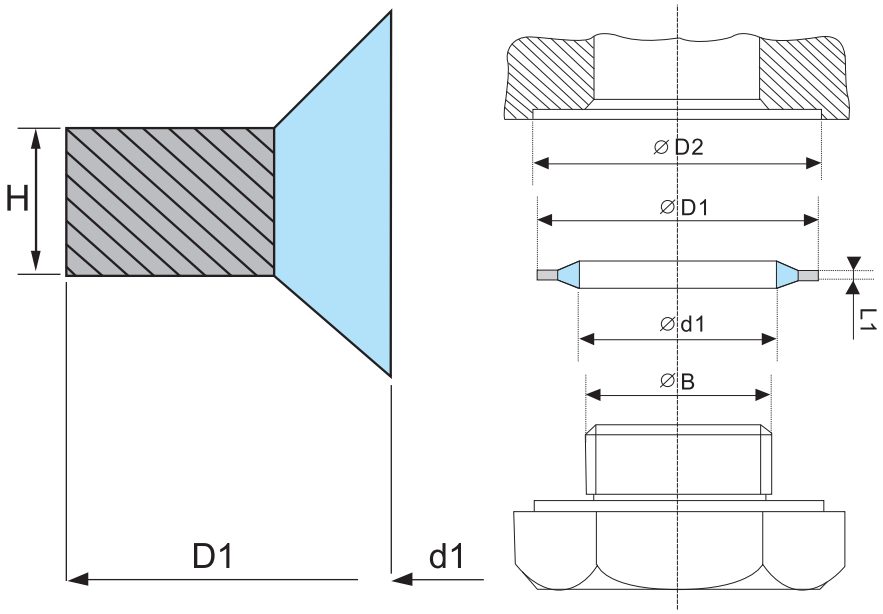

華司油封800系列規格表
Bonded Seal 800 Type Size List

TYPE	SIZE
800	3.05*6.35*1.22
800	3.6*7.5*1
800	4.1*7.2*1
800	4.12*7.26*1.22
800	4.5*7*1
800	4.6*9*1
800	5.21*8.38*1.22
800	5.6*10*1
800	5.7*9*1
800	5.7*10*1

TYPE	SIZE
800	5.7*10*4
800	6.2*9.2*1
800	6.6*11*1
800	6.7*10*1
800	6.7*11*1
800	6.7*11*2.5
800	6.85*13.27*1.3
800	6.86*13.21*1.22
800	6.99*13.34*1.22
800	7*11.4*1

TYPE	SIZE
800	7.1*12*1
800	7.3*10.2*1
800	8.3*12.7*1.25
800	8.31*13.34*1.22
800	8.5*13.4*1
800	8.6*13*1
800	8.64*14.22*1.22
800	8.7*13*1
800	8.7*14*1
800	8.7*16*1
800	9.3*13.3*1
800	10.35*16*2
800	10.37*15.88*2.03
800	10.4*14.7*1.25
800	10.7*16*1.5
800	10.7*17*1.5
800	10.7*18*1.5
800	11.26*18.36*2.03
800	11.4*16.3*1.5
800	11.69*19.05*2.03
800	11.8*18.1*1.5
800	11.8*18.5*1.5
800	11.8*19.1*1.5
800	12.7*18*1.5
800	12.7*19*1.5
800	12.7*20*1.5
800	13.7*20*1.5
800	13.7*22*1.5
800	13.74*20.57*2.03
800	13.8*20.1*1.5
800	13.85*18.7*1.25
800	14*18.7*1.5
800	14.7*21*1.5
800	14.7*22*1.5
800	14.86*22.23*2.03
800	15.83*22.23*2.03
800	16*22.7*1.5
800	16.51*25.4*2.03
800	16.7*23*1.5
800	16.7*24*1.5

TYPE	SIZE
800	17.2*23.9*2.1
800	17.28*23.8*2.03
800	17.36*22.7*1.25
800	17.4*24*1.5
800	18*24.7*1.5
800	18*26.5*2
800	18.16*25.4*2.34
800	18.7*26*1.5
800	18.7*27*2
800	19.69*26.92*2.34
800	20.7*28*1.5
800	20.7*29*2
800	21.5*28.6*2.5
800	21.5*28.7*2.5
800	21.54*28.58*2.34
800	21.55*26.7*1.25
800	21.7*30*2
800	22.5*28*1.5
800	22.7*30*2
800	22.7*30*3
800	22.7*31*2
800	23.49*31.75*2.34
800	23.7*32*2
800	24.26*33.27*2.34
800	24.7*32*2
800	24.7*33*2
800	26.7*35*2
800	27*35.3*2
800	27.05*34.93*2.34
800	27.2*36*2
800	27.3*32.6*1.25
800	27.3*32.6*2
800	27.7*36*2
800	27.82*38.61*2.34
800	28.6*36*2
800	28.7*37*2
800	29.2*37.5*2
800	29.33*36.58*2.34
800	30.7*39*2
800	30.81*38.10*2.34

TYPE	SIZE
800	31*39*2
800	32.64*41.4*3.25
800	33.7*42*2
800	33.89*42.8*2.34
800	33.89*42.8*3.25
800	34.2*39.6*2
800	34.3*43*2
800	35.94*44.45*3.25
800	36.7*46*2
800	37*48*2.5
800	38.96*47.75*3.25
800	40*51*2.5
800	42.7*53*3
800	42.8*49.5*2
800	42.93*52.38*3.25
800	43*54*2.5
800	45.34*57.15*3.25
800	46*57*2.5
800	48.44*58.6*3.25
800	48.7*55.5*2
800	48.7*59*3
800	49*60*2.5
800	51.69*63.5*3.25
800	52*60*3
800	53.3*64.5*3
800	54.89*69.85*3.25
800	58.04*70.36*3.25
800	60.5*68.5*2
800	60.58*73.03*3.25
800	60.7*73*3
800	64.39*77.22*3.25
800	66.68*79.5*3.25
800	68.6*79.5*3.5
800	76.08*90.3*3.25
800	76.08*90.3*3.38
800	89.09*101.48*3.25
800	127*143.67*5

TYPE	SIZE

SOG&H.T Automobile Oil Seal

BRAND	PART NO.	SIZE
YUEJIN	24B101070	56*112*8/10
YAMAHA	93101-14007	14*25*5 !
YAMAHA	93101-20138	20*30/33*5/6
YAMAHA	93101-20169	20*32/35.5*6
YAMAHA	93101-22067	22*36*6 NK7CS
YAMAHA	93102-22843	22*32*7 L
YAMAHA	93102-26852	26*48*7 R
TOYOTA	04332-30010	38*58*18
TOYOTA	04422-10010	SEAL KIT T1182
TOYOTA	04422-10020	SEAL KIT T1202
TOYOTA	04422-10030	SEAL KIT
TOYOTA	04422-12010	SEAL KIT T1168
TOYOTA	04422-12020	SEAL KIT T1205
TOYOTA	04422-12030	SEAL KIT
TOYOTA	04422-12040	SEAL KIT T1205
TOYOTA	04422-12050	SEAL KIT
TOYOTA	04422-12070	SEAL KIT
TOYOTA	04422-12100	SEAL KIT
TOYOTA	04422-16010	SEAL KIT T1123
TOYOTA	04422-16020	SEAL KIT T1164
TOYOTA	04422-20010	SEAL KIT T1168
TOYOTA	04422-20020	SEAL KIT T1168
TOYOTA	04422-20080	SEAL KIT
TOYOTA	04422-32010	SEAL KIT T1166
TOYOTA	09241-47002	47*7
TOYOTA	09241-50001	50*7
TOYOTA	09241-54002	54*7.5/14.5
TOYOTA	11193-15010	26*48*10
TOYOTA	11193-16010	26*48*10
TOYOTA	11193-35010	26*48*10
TOYOTA	11193-50010	26*43*10
TOYOTA	13276-53900	27*49*11
TOYOTA	15165-70010	18*30*7 R
TOYOTA	22443-22000	27*44*7.5/10.5
TOYOTA	29341-64030	20*32*6
TOYOTA	29341-64130	17.5*30/37*6/7.5
TOYOTA	30100-PT0-000	12.5*22.55*5.5 W
TOYOTA	43442-OK010	89.5*7.5/12.2
TOYOTA	7700-532-196	15*26*7
TOYOTA	770-308-7087	36*54*7.5

BRAND	PART NO.	SIZE
TOYOTA	90029-21007	20*32*5 R
TOYOTA	90029-21020	20*32*5 R
TOYOTA	90029-21022	22*34*6.5 R
TOYOTA	90033-11020	65*95*14/22
TOYOTA	90033-11031	127*147*11.5
TOYOTA	90033-11032	57*124*13
TOYOTA	90033-19001	101*114*10
TOYOTA	90043-11117-000	19*32*8
TOYOTA	90080-31023	38*50*8 R
TOYOTA	90080-31038	27*44*8.5
TOYOTA	90080-31049	38*50*8 R
TOYOTA	90080-31097	32*46*6 R
TOYOTA	90080-31110	47.63*80.16*17/21 R
TOYOTA	90304-T0001	83.5*97/107*11.5
TOYOTA	90310-20026	20*30*7
TOYOTA	90310-23005	23*34*6.5
TOYOTA	90310-25004	25*38*7/8
TOYOTA	90310-25006	25*45*11
TOYOTA	90310-25020	25*38*7/8
TOYOTA	90310-25021	25*38*7
TOYOTA	90310-28014	28*40*8
TOYOTA	90310-28027	28*40*8
TOYOTA	90310-28038	28*38*7
TOYOTA	90310-29001	29*38*7/12
TOYOTA	90310-30035	30*40*7
TOYOTA	90310-32024	32*44*9
TOYOTA	90310-34001	34*48*8
TOYOTA	90310-34003	34*46*8
TOYOTA	90310-35001	35*41*5.5/9
TOYOTA	90310-35005	35*50*9.5 W
TOYOTA	90310-35005	35*50*9.5
TOYOTA	90310-35007	35*52*6
TOYOTA	90310-35009	35*50*8
TOYOTA	90310-35010	35*50*9.5 W
TOYOTA	90310-35012	35*50*8
TOYOTA	90310-36001	36*46*9
TOYOTA	90310-36002	36*46*9
TOYOTA	90310-36003	36*41*5.5/9
TOYOTA	90310-38033	38*44*18
TOYOTA	90310-40001	40*46*18

SOG&H.T Automobile Oil Seal

BRAND	PART NO.	SIZE	BRAND	PART NO.	SIZE
TOYOTA	90310–50001	50*70*9	TOYOTA	90311–27007	27*44*8.5
TOYOTA	90310–50006	50*70*9	TOYOTA	90311–28003	28.6*43*6.5
TOYOTA	90310–50039	50*70*9	TOYOTA	90311–28004	28.6*43*6.5
TOYOTA	90310–56044	56*66*17	TOYOTA	90311–30002	30*42*8
TOYOTA	90310–58002	58*70*7	TOYOTA	90311–30002	30*42*7 R
TOYOTA	90310–63001	63*78*9 W	TOYOTA	90311–30005	30*42*8
TOYOTA	90310–99011	100*154*34	TOYOTA	90311–30006	30*42*7 R
TOYOTA	90310–99042	110*154*12/34	TOYOTA	90311–30010	30*45*8
TOYOTA	90311–11128	11*22*7	TOYOTA	90311–30017	30*42*7 R
TOYOTA	90311–14001	14*24/30*15	TOYOTA	90311–30115	30*45*8
TOYOTA	90311–15001	15*25*7	TOYOTA	90311–32001	32*46*6 R
TOYOTA	90311–15002	15*25*7	TOYOTA	90311–32006	32*48*9/15.5
TOYOTA	90311–17007	17*34*7.5	TOYOTA	90311–32009	32*52*8
TOYOTA	90311–17062	17.4*30*7	TOYOTA	90311–32010	32*52*11
TOYOTA	90311–17092	17.4*30*7	TOYOTA	90311–32012	32*53*7 R
TOYOTA	90311–18001	18*30*8	TOYOTA	90311–32013	32*48*7 R
TOYOTA	90311–18002	18*30*8	TOYOTA	90311–32014	32*44*9
TOYOTA	90311–18010	18*30*8	TOYOTA	90311–32015	32*42*5
TOYOTA	90311–18021	18*32*7	TOYOTA	90311–32016	32*40*5
TOYOTA	90311–19001	19*32*8	TOYOTA	90311–32017	32*46*6 R
TOYOTA	90311–19002	19*32*7	TOYOTA	90311–32018	32*46*6 R
TOYOTA	90311–19002	19*32*7/8	TOYOTA	90311–32019	32*46*6 R
TOYOTA	90311–19008	19*38*7	TOYOTA	90311–32020	32*46*6 R
TOYOTA	90311–19010	19*32*6/7	TOYOTA	90311–32022	32*53*7 R
TOYOTA	90311–20006	20*30*8	TOYOTA	90311–32024	32*44*9
TOYOTA	90311–24005	24*36.5*8.5	TOYOTA	90311–32074	32*52*11
TOYOTA	90311–25001	25*38*7	TOYOTA	90311–32086	32*52*11
TOYOTA	90311–25002	25*45*11	TOYOTA	90311–32106	32*48*8
TOYOTA	90311–25003	25*38*7 R	TOYOTA	90311–33085	33*44*8
TOYOTA	90311–25011	25*37*8	TOYOTA	90311–34001	34*44*8
TOYOTA	90311–25016	25*37*8	TOYOTA	90311–34005	34*54*9/15.5
TOYOTA	90311–25020	25.5*37.5*6 R	TOYOTA	90311–34006	34*48*8
TOYOTA	90311–25021	25.5*37.5*6 R	TOYOTA	90311–34007	34*54*9/15.5
TOYOTA	90311–25028	25*37*8	TOYOTA	90311–34008	34*63*9/15 L
TOYOTA	90311–25032	25.5*37.5*6 R	TOYOTA	90311–34012	34*54*9/15.5
TOYOTA	90311–25110	25*38*8	TOYOTA	90311–34016	34*54*9/15.5
TOYOTA	90311–25141	25*38*7	TOYOTA	90311–34017	34*63*9/15 L
TOYOTA	90311–26001	26*48*7	TOYOTA	90311–34022	34*56*9/15 L
TOYOTA	90311–26003	26*38*6.5 SC4	TOYOTA	90311–34023	34*54*9/15.5
TOYOTA	90311–27006	27*44*8.5	TOYOTA	90311–34026	34*63*9/15 L

SOG&H.T Automobile Oil Seal

BRAND	PART NO.	SIZE	BRAND	PART NO.	SIZE
TOYOTA	90311–34028	34*63*9/15 L	TOYOTA	90311–38010	38*74*11 R
TOYOTA	90311–34030	34*56*9/15 L	TOYOTA	90311–38011	38*63*10/17
TOYOTA	90311–34031	34*54*9/15.5	TOYOTA	90311–38013	38.5*58*11 R
TOYOTA	90311–34033	34*54*9/15.5	TOYOTA	90311–38014	38*65*12/19 R
TOYOTA	90311–34042	34*63*9/15 L	TOYOTA	90311–38015	38*65*12/19 R
TOYOTA	90311–34045	34*54*9/15.5	TOYOTA	90311–38016	38*58*11
TOYOTA	90311–35003	35*49*6 R	TOYOTA	90311–38017	38*50*8 R
TOYOTA	90311–35004	35*55*11 S	TOYOTA	90311–38018	38*50*8 R
TOYOTA	90311–35007	35*55*9/15.5 W	TOYOTA	90311–38019	38*65*10/17
TOYOTA	90311–35008	35*49*6 R	TOYOTA	90311–38022	38.5*58*8.5 R
TOYOTA	90311–35013	35*49*6 R	TOYOTA	90311–38024	38.5*58*11 R
TOYOTA	90311–35014	35*55*9/15.5 W	TOYOTA	90311–38025	38*50*6 R
TOYOTA	90311–35017	35*49*6 R	TOYOTA	90311–38027	38*65*10/17
TOYOTA	90311–35018	35*63*10/16.5	TOYOTA	90311–38028	38*74*11 R
TOYOTA	90311–35018	35*63*9/15.5 W	TOYOTA	90311–38032	38*58*11
TOYOTA	90311–35019	35*55*9/15.5 W	TOYOTA	90311–38033	38*52*9
TOYOTA	90311–35020	35*63*9/15.5 W	TOYOTA	90311–38035	38*74*11/18
TOYOTA	90311–35022	35*49*6 R	TOYOTA	90311–38036	38*50*8 R
TOYOTA	90311–35023	35*48*7 R	TOYOTA	90311–38037	38*52*7
TOYOTA	90311–35024	35*50*9.5	TOYOTA	90311–38040	38*58*11
TOYOTA	90311–35032	35*63*10/16.5	TOYOTA	90311–38043	38*58*11
TOYOTA	90311–35033	35*55*9/15.5 W	TOYOTA	90311–38047	38*74*11/18
TOYOTA	90311–35035	35*49*7 R	TOYOTA	90311–38057	38*65*12/19 R
TOYOTA	90311–35038	35*44*7	TOYOTA	90311–38059	38*50*8 R
TOYOTA	90311–35040	35*49*6 R NBR	TOYOTA	90311–38063	38*55*9
TOYOTA	90311–35046	35*57*9/15	TOYOTA	90311–38067	38*50*8 R
TOYOTA	90311–35055	35*55*9/15.5 W	TOYOTA	90311–38076	38*63*9*15.5
TOYOTA	90311–35057	35*54*9/21 R	TOYOTA	90311–38078	38*50*6 R
TOYOTA	90311–35065	35*54*9/21 R	TOYOTA	90311–38079	38*74*11 R
TOYOTA	90311–35071	35*55*11	TOYOTA	90311–38089	38*50*6 R
TOYOTA	90311–35099	35*46*7	TOYOTA	90311–38091	38*50*6 R
TOYOTA	90311–35127	35*55*11	TOYOTA	90311–38093	38*65*9
TOYOTA	90311–35131	35*55*11	TOYOTA	90311–38111	38.5*58*11 R
TOYOTA	90311–36001	36*50*7	TOYOTA	90311–38124	38*65*12/19 R
TOYOTA	90311–36005	36*44*5	TOYOTA	90311–38133	38*74*11 R
TOYOTA	90311–36104	36*50*7	TOYOTA	90311–38134	38*74*11
TOYOTA	90311–38002	38.5*58*11 R	TOYOTA	90311–38138	38.5*58*11 R
TOYOTA	90311–38005	38*58*11	TOYOTA	90311–38140	38*58*11
TOYOTA	90311–38007	38*65*9	TOYOTA	90311–40001	40*58*11 L
TOYOTA	90311–38009	38*58*8	TOYOTA	90311–40006	40*55*6 R

SOG&H.T Automobile Oil Seal

BRAND	PART NO.	SIZE	BRAND	PART NO.	SIZE
TOYOTA	90311–40013	40*55*6 RM	TOYOTA	90311–45026	45*68*12
TOYOTA	90311–40015	40.5*54.5*7 R	TOYOTA	90311–45069	45*68*12
TOYOTA	90311–40022	40*55*6 RM	TOYOTA	90311–45094	45*68*12
TOYOTA	90311–40030	40*64*8/15 R	TOYOTA	90311–46001	46*63*6.5 R
TOYOTA	90311–41001	41*55*6	TOYOTA	90311–47001	47.5*70.6*9
TOYOTA	90311–41002	41*55*7/12	TOYOTA	90311–47010	47*80*10/16.5 W
TOYOTA	90311–41003	41*55*6	TOYOTA	90311–47011	47*69*10/16 W
TOYOTA	90311–41004	41*55*7/12	TOYOTA	90311–47012	47*69*10/16 W
TOYOTA	90311–41007	41*61*9/13.5 W	TOYOTA	90311–47013	47*80*10/16.5 W
TOYOTA	90311–41009	41*74*11/18 W	TOYOTA	90311–47029	47.6*70.6*13.5
TOYOTA	90311–41123	41*53*7	TOYOTA	90311–47048	47.5*70.6*9
TOYOTA	90311–42001	42*60*9 R	TOYOTA	90311–48001	48*62*9
TOYOTA	90311–42002	42*60*7 R	TOYOTA	90311–48002	48*74*10
TOYOTA	90311–42003	42*60*7 R	TOYOTA	90311–48003	48*62*8
TOYOTA	90311–42006	42*55*6	TOYOTA	90311–48004	48*70*12 R
TOYOTA	90311–42007	42*60*7 R	TOYOTA	90311–48005	48*62*9/24
TOYOTA	90311–42008	42*60*7 R	TOYOTA	90311–48007	48*72*8.5
TOYOTA	90311–42012	42*60*7 R	TOYOTA	90311–48008	48*72*8.5
TOYOTA	90311–42014	42*60*9	TOYOTA	90311–48009	48*74*10/15
TOYOTA	90311–42015	42*60*6 R	TOYOTA	90311–48010	48*62*8/13
TOYOTA	90311–42018	42*55*6	TOYOTA	90311–48011	48*62*9
TOYOTA	90311–42026	42*60*7 R	TOYOTA	90311–48012	48*72*8.5
TOYOTA	90311–42027	42*55*8 R	TOYOTA	90311–48013	48*73*7
TOYOTA	90311–42036	42*60*7 R	TOYOTA	90311–48014	48*68*7 R
TOYOTA	90311–42043	42*54*6 R	TOYOTA	90311–48016	48*62*8
TOYOTA	90311–42045	42*60*7 R	TOYOTA	90311–48020	48*68*7 R
TOYOTA	90311–42055	42*55*7	TOYOTA	90311–48023	48*65*10/17 L
TOYOTA	90311–42077	42*55*8 R	TOYOTA	90311–48027	48*62*9 R
TOYOTA	90311–43001	43*70*9/15.5	TOYOTA	90311–48089	48*82*12 R
TOYOTA	90311–43003	43*65*8	TOYOTA	90311–48122	48*62*7
TOYOTA	90311–43004	43*60*7 R	TOYOTA	90311–48135	48*82*12 R
TOYOTA	90311–43006	43*60*7 R	TOYOTA	90311–50002	50*72*12 R
TOYOTA	90311–45001	45*62*9	TOYOTA	90311–50003	50*73*9
TOYOTA	90311–45002	45*68*12	TOYOTA	90311–50005	50*68*9
TOYOTA	90311–45003	45*62*8	TOYOTA	90311–50006	50*72*12 R
TOYOTA	90311–45006	45*68*12	TOYOTA	90311–50007	50*72*12 R
TOYOTA	90311–45008	45*68*8	TOYOTA	90311–50013	50*72*9/14 R
TOYOTA	90311–45014	45*68*7 R	TOYOTA	90311–50014	50*70*10/16 R
TOYOTA	90311–45015	45*62*9 R	TOYOTA	90311–50017	50*68*9/14 R
TOYOTA	90311–45018	45*62*9	TOYOTA	90311–50024	50*80*10.8/17.3 L

SOG&H.T Automobile Oil Seal

BRAND	PART NO.	SIZE	BRAND	PART NO.	SIZE
TOYOTA	90311–50030	50*70*9	TOYOTA	90311–66001	66*85*8/10
TOYOTA	90311–50035	50*80*10.8/17.3 L	TOYOTA	90311–66002	66*80*9
TOYOTA	90311–50037	50*80*10.8/17.3 L	TOYOTA	90311–66003	66*85*8/10
TOYOTA	90311–50039	50*70*9	TOYOTA	90311–68001	68*90*10
TOYOTA	90311–50042	50*70*12	TOYOTA	90311–68002	68*92*9.7MIN QTY500
TOYOTA	90311–50047	50*80*10.8/17.3 L	TOYOTA	90311–70001	70*92*12 L
TOYOTA	90311–50049	50*72*12 R	TOYOTA	90311–70004	70*92*8.5 L
TOYOTA	90311–50051	50*68*9/14 R	TOYOTA	90311–70007	70*92*8.5 L
TOYOTA	90311–50080	50*70*9	TOYOTA	90311–70011	70*94*8/10
TOYOTA	90311–50136	50*68*9	TOYOTA	90311–70075	70*92*12 L
TOYOTA	90311–50951–71	50*66*8 R	TOYOTA	90311–70120	70*92*12 L
TOYOTA	90311–52003	52*70*8.5 R	TOYOTA	90311–70143	70*100*13 R
TOYOTA	90311–52005	52*75*7.5/12	TOYOTA	90311–73001	73.5*89*8.5 L
TOYOTA	90311–52006	52*66*7.5/12	TOYOTA	90311–73002	73.5*89*8.5 L
TOYOTA	90311–52013	52*70*8.5 R	TOYOTA	90311–73003	73.5*89*8.5 L
TOYOTA	90311–52059	52*65*9	TOYOTA	90311–73004	73.5*89*8.5 L
TOYOTA	90311–54003	54*66*7.5/10	TOYOTA	90311–75003	75*108*10/19.5
TOYOTA	90311–55008	55*78*12	TOYOTA	90311–75004	75*100*8.5 L
TOYOTA	90311–55008	55*78*12	TOYOTA	90311–75007	75*100*10
TOYOTA	90311–55137	55*72*12	TOYOTA	90311–75016	75*107*8 L
TOYOTA	90311–56006	56*73/77.7*14	TOYOTA	90311–75019	75*107*8 L
TOYOTA	90311–56007	56*75*6.5/11	TOYOTA	90311–75039	75*100*13
TOYOTA	90311–56008	56*73*8/12.5	TOYOTA	90311–75113	75*100*13 L
TOYOTA	90311–56014	56*78*7.5/13	TOYOTA	90311–75114	75*100*13 L
TOYOTA	90311–56016	56*73/77.7*14	TOYOTA	90311–76001	76*94*8.5 L
TOYOTA	90311–57001	57*81*8/11	TOYOTA	90311–78001	78*115*10/19.5
TOYOTA	90311–58002	58*102*12 R	TOYOTA	90311–78008	78*110*8.5 L
TOYOTA	90311–58005	58*75*9/14.5 R	TOYOTA	90311–80001	80*100*12 L
TOYOTA	90311–58006	58*72*7 R	TOYOTA	90311–80002	80*100*12 L
TOYOTA	90311–58007	58*75*9/14.5 R	TOYOTA	90311–80003	80*100*8.5 L
TOYOTA	90311–58008	58*78*10/14 L	TOYOTA	90311–80004	80*100*8.5 L
TOYOTA	90311–58118	58*72*9	TOYOTA	90311–80005	80*100*8.5 L
TOYOTA	90311–60017	60*78*10	TOYOTA	90311–80007	80*100*8.5 L
TOYOTA	90311–61001	61*76*7/10	TOYOTA	90311–80009	80*100*10 L
TOYOTA	90311–62001	62*85*8/10	TOYOTA	90311–80012	80*100*8.5 L
TOYOTA	90311–62002	62*85*8/17	TOYOTA	90311–80014	80*100*8.5 L
TOYOTA	90311–62147	62*85*8/10	TOYOTA	90311–80068	80*100*12 L
TOYOTA	90311–63001	63*90*7/10	TOYOTA	90311–80139	80*100*12 L
TOYOTA	90311–65032	65*88*12	TOYOTA	90311–85001	85*105*13 L
TOYOTA	90311–65033	65*95*14	TOYOTA	90311–85003	85*105*10 L

SOG&H.T Automobile Oil Seal

BRAND	PART NO.	SIZE	BRAND	PART NO.	SIZE
TOYOTA	90311–85004	85*105*10 L	TOYOTA	90312–35030	10*20*7
TOYOTA	90311–85006	85*105*10 L	TOYOTA	90312–47005	48*70*10
TOYOTA	90311–85007	85*105*10 L	TOYOTA	90312–55010	55*82*10
TOYOTA	90311–85008	85*105*10 L	TOYOTA	90312–60009	60*78*7
TOYOTA	90311–85009	85*105*10 L	TOYOTA	90312–87001	88*106/110*10/18
TOYOTA	90311–88001	88*106*8.5 L	TOYOTA	90312–95001	90*108/111*10/12
TOYOTA	90311–88003	88*106*9 L	TOYOTA	90312–96001	81*96/100*10.5/18
TOYOTA	90311–88005	88*106*9 L	TOYOTA	90312–A0002	88*106/110*10/18
TOYOTA	90311–88102	88*115*13	TOYOTA	90312–T0001	81*96/100*10.5/18
TOYOTA	90311–89003	89*105*10 L	TOYOTA	90313–13001	13*20*5
TOYOTA	90311–89005	89*105*10 L	TOYOTA	90313–48001	48*62*9/24
TOYOTA	90311–90002	90*110*9 L	TOYOTA	90313–48002	48*62*9/24
TOYOTA	90311–90003	90*110*9 L	TOYOTA	90313–48004	48*75/83*10/18
TOYOTA	90311–90008	90*110*9 L	TOYOTA	90313–48005	48*62*9/24
TOYOTA	90311–92001	92*110*8.5 L	TOYOTA	90313–T0001	54*64*9/24
TOYOTA	90311–92003	92*110*9 L	TOYOTA	90313–T0002	56*69/76*7.5/17.7
TOYOTA	90311–92004	92*110*8.5 L	TOYOTA	90316–48003	48*72*11
TOYOTA	90311–92008	92*110*9 L	TOYOTA	90316–69001	69*86/101*7/15
TOYOTA	90311–95001	95*115*12 L	TOYOTA	90316–83001	83*100/110*8/15.5
TOYOTA	90311–95002	95*115*12 L	TOYOTA	90316–A0001	69*86/101*7/15
TOYOTA	90311–95003	95*115*12 L	TOYOTA	90316–A0002	83*100/110*8/15.5
TOYOTA	90311–95005	95*115*12 L	TOYOTA	90316–T0002	72.5*89.5*7.4/16
TOYOTA	90311–95008	95*115*9.5/12 L	TOYOTA	93102–15130	15*30*7
TOYOTA	90311–95091	95*115*12 L	TOYOTA	96721–24063	63*2.5 min qty.
TOYOTA	90311–99002	100*120*13/18	TOYOTA	H3106	58*75*9/14.5 R
TOYOTA	90311–99003	100*120*11.5	TOYOTA	MB 035277	40*52*7
TOYOTA	90311–99005	105*120*11	TOYOTA	NJ 001	70*92*8.5 L
TOYOTA	90311–99006	99*119*9.5 L	TOYOTA	NJ 002	38*74*11 R
TOYOTA	90311–99020	120*150*14	TOYOTA	NJ 003	47.6*70.6*13.5
TOYOTA	90311–99065	100*120*11	TOYOTA	NJ 011	40*52*7
TOYOTA	90311–A0015	42*54*6 R	TOYOTA	NJ 012	35*44*7
TOYOTA	90311–T0010	61*78*7/10	TOYOTA	NJ 017	38*65*12/19 R
TOYOTA	90311–T0013	41*74*11/18 W	TOYOTA	NJ 030	80*100*12 L
TOYOTA	90311–T0015	47*69*10/16 W	TOYOTA	NJ 044	75*100*13 L
TOYOTA	90311–T0016	47*80*10/16.5 W	TOYOTA	NJ 047	55*82*10
TOYOTA	90311–T0035	47*80*10/16.5 W	TOYOTA	NJ 055	100*120*11
TOYOTA	90311–T0037	47*69*10/16 W	TOYOTA	NJ 062	62*85*8/10
TOYOTA	90312–30001	30*38*5	TOYOTA	NJ 064	47.6*70.6*9
TOYOTA	90312–32001	32*42*5	TOYOTA	NJ 066	48*62*7
TOYOTA	90312–32002	32*40*5	TOYOTA	NJ 067	58*72*9

SOG&H.T Automobile Oil Seal

BRAND	PART NO.	SIZE	BRAND	PART NO.	SIZE
TOYOTA	NJ 069	50*68*9	TOYOTA	NJ 557	48*62*9
TOYOTA	NJ 070	50*70*9	TOYOTA	NJ 559	32*46*8
TOYOTA	NJ 071	48*62*9/24	TOYOTA	NJ 563	36*50*7
TOYOTA	NJ 094	120*150*14	TOYOTA	NJ 564	50*70*9
TOYOTA	NJ 095	65*95*14	TOYOTA	NJ 566	105*120*11
TOYOTA	NJ 102	38.5*58*11 R	TOYOTA	NJ 586	25*45*11
TOYOTA	NJ 104	41*53*7	TOYOTA	NJ 591	28*40*8
TOYOTA	NJ 109	35*46*7	TOYOTA	NJ 592	36*50*7
TOYOTA	NJ 127	38*52*7	TOYOTA	NJ 593	38*65*9
TOYOTA	NJ 239	50*72*12 R	TOYOTA	NJ 606	32*52*11
TOYOTA	NJ 240	95*115*12 L	TOYOTA	NJ 607	35*55*11
TOYOTA	NJ 243	45*68*12	TOYOTA	NJ 608	38*58*8
TOYOTA	NJ 261	45*62*9	TOYOTA	NJ 609	38*58*11
TOYOTA	NJ 268	32*48*8	TOYOTA	NJ 614	28*38*7
TOYOTA	NJ 344	42*60*7 R	TOYOTA	NJ 615	30*40*7
TOYOTA	NJ 346	90*110*9 L	TOYOTA	NJ 616	36*46*9
TOYOTA	NJ 347	38*50*8	TOYOTA	NJ 617	25*37*8
TOYOTA	NJ 349	32*46*6 R	TOYOTA	NJ 645	52*70*8.5 R
TOYOTA	NJ 351	45*62*8	TOYOTA	NJ 654	20*32*5 R
TOYOTA	NJ 353	35*49*6 R	TOYOTA	NJ 660	41*55*7/12
TOYOTA	NJ 354	85*105*10 L	TOYOTA	NJ 661	66*85*8/10
TOYOTA	NJ 358	42*60*9 R	TOYOTA	NJ 702	38*44*12.8/17.5
TOYOTA	NJ 360	80*100*8.5 L	TOYOTA	NJ 703	26*48*7 R
TOYOTA	NJ 407	75*100*8.5 L	TOYOTA	NJ 704	34*54*9/15.5
TOYOTA	NJ 420	101*114*10	TOYOTA	NJ 705	34*63*9/15 L
TOYOTA	NJ 434	35*55*11	TOYOTA	NJ 706	38*50*6 R
TOYOTA	NJ 436	32*44*9	TOYOTA	NJ 707	38*55*9
TOYOTA	NJ 437	35*41*5.5/9	TOYOTA	NJ 708	41*55*6
TOYOTA	NJ 438	18*30*7	TOYOTA	NJ 709	42*55*6
TOYOTA	NJ 439	28.6*43*6.5	TOYOTA	NJ 710	50*73*9
TOYOTA	NJ 444	19*32*8	TOYOTA	NJ 711	60*78*10
TOYOTA	NJ 515	56*66*11.1/17.5	TOYOTA	NJ 719	38.5*58*8.5 R
TOYOTA	NJ 516	100*154*34	TOYOTA	NJ 720	88*115*13
TOYOTA	NJ 517	110*154*12/34	TOYOTA	NJ 742	14*24/30*15
TOYOTA	NJ 518	17.4*30*7	TOYOTA	NJ 747	13*20*5
TOYOTA	NJ 519	30*45*8	TOYOTA	NJ 762	15*25*7
TOYOTA	NJ 520	33*44*8	TOYOTA	NJ 763	34*44*8
TOYOTA	NJ 522	38*63*10/17	TOYOTA	NJ 858	19*38*7
TOYOTA	NJ 523	48*82*12 R	TOYOTA	NJ 859	30*42*8
TOYOTA	NJ 525	68*90*10	TOYOTA	NJ 860	34*54*9/15.5

SOG&H.T Automobile Oil Seal

BRAND	PART NO.	SIZE	BRAND	PART NO.	SIZE
TOYOTA	NJ 861	35*55*9/15.5 W	TOYOTA	T1018	18*32*7
TOYOTA	NJ 863	48*62*8	TOYOTA	T1019	19*32*8
TOYOTA	NJ 864	48*74*10/15	TOYOTA	T1044	28.6*43*6.5
TOYOTA	NJ 865	48*62*8/13	TOYOTA	T1048	28*38*7
TOYOTA	NJ 866	48*72*8.5	TOYOTA	T1050	30*45*8
TOYOTA	NJ 867	52*66*7.5/12	TOYOTA	T1052	32*52*11
TOYOTA	NJ 868	56*73*8/12.5	TOYOTA	T1054	32*48*8
TOYOTA	NJ 869	58*102*12 R	TOYOTA	T1056	35*44*7
TOYOTA	NJ 871	30*38*5	TOYOTA	T1057	35*55*11
TOYOTA	NJ 872	32*40*5	TOYOTA	T1060	38.5*58*11 R
TOYOTA	NJ 901	20*30*7	TOYOTA	T1063	38*58*8
TOYOTA	NJ 913	19*32*7	TOYOTA	T1065	38*63*10/17
TOYOTA	NJ 963	18*30*7 R	TOYOTA	T1067	38*74*11 R
TOYOTA	NJ 965	32*48*9/15.5	TOYOTA	T1068	38*44*12.8/17.5
TOYOTA	NJ 966	75*108*10/19.5	TOYOTA	T1071	38*55*9
TOYOTA	NJ 968	25*38*8	TOYOTA	T1073	40*52*7
TOYOTA	NJ 970	116*132*12	TOYOTA	T1074	41*53*7
TOYOTA	NJ 993	45*68*8	TOYOTA	T1075	42*55*7
TOYOTA	NJ 996	54*66*7.5/10	TOYOTA	T1076	45*62*9
TOYOTA	NJ 998	63*90*7/10	TOYOTA	T1077	45*68*12
TOYOTA	NK 044	29*38*7/12	TOYOTA	T1079	47.6*70.6*13.5
TOYOTA	NK 045	40*46*18	TOYOTA	T1080	48*62*9
TOYOTA	NK 048	32*53*7 R	TOYOTA	T1081	48*62*9 R
TOYOTA	NK 050	40*55*6 R	TOYOTA	T1083	48*62*7
TOYOTA	NK 052	48*62*9 L	TOYOTA	T1084	48*82*12 R
TOYOTA	NK 053	56*73/77.7*14	TOYOTA	T1086	50*70*9
TOYOTA	NK 054	56*75*6.5/11	TOYOTA	T1088	50*68*9
TOYOTA	NK 063	65*88*12	TOYOTA	T1089	52*65*9
TOYOTA	NK 064	48*70*10	TOYOTA	T1090	55*78*12
TOYOTA	NK 078	60*78*7	TOYOTA	T1090	55*78*12
TOYOTA	NK 201	SEAL KIT	TOYOTA	T1092	58*72*9
TOYOTA	SZ313-58001	58*75*9/14.5 R	TOYOTA	T1093	60*78*10
TOYOTA	T1004	25*45*11	TOYOTA	T1095	62*85*8/10
TOYOTA	T1005	28*40*8	TOYOTA	T1096	65*88*12
TOYOTA	T1007	32*44*9	TOYOTA	T1097	65*95*14
TOYOTA	T1008	35*41*5.5/9	TOYOTA	T1098	68*90*10
TOYOTA	T1013	100*154*34	TOYOTA	T1103	75*100*13 L
TOYOTA	T1014	100*120*11	TOYOTA	T1105	88*115*13
TOYOTA	T1016	15*25*7	TOYOTA	T1107	120*150*14
TOYOTA	T1017	17.4*30*7	TOYOTA	T1111	48*70*10

SOG&H.T Automobile Oil Seal

BRAND	PART NO.	SIZE	BRAND	PART NO.	SIZE
TOYOTA	T1115	48*62*9/24	TOYOTA	T1174	25*37*8
TOYOTA	T1117	38*65*12/19 R	TOYOTA	T1175	34*54*9/15.5
TOYOTA	T1118	26*48*7 R	TOYOTA	T1176	34*63*9/15 L
TOYOTA	T1120	32*48*9/15.5	TOYOTA	T1178	42*60*7 R
TOYOTA	T1121	70*92*12 L	TOYOTA	T1180	80*100*8.5 L
TOYOTA	T1124	36*50*7	TOYOTA	T1181	40*46*18
TOYOTA	T1125	38*58*11	TOYOTA	T1183	85*105*10 L
TOYOTA	T1128	95*115*12 L	TOYOTA	T1184	58*102*12 R
TOYOTA	T1129	80*100*12 L	TOYOTA	T1186	41*55*7/12
TOYOTA	T1130	36*50*7	TOYOTA	T1187	66*85*8/10
TOYOTA	T1132	50*72*12 R	TOYOTA	T1190	48*74*10/15
TOYOTA	T1133	50*73*9	TOYOTA	T1192	38*50*8 R
TOYOTA	T1135	29*38*7/12	TOYOTA	T1193	32*53*7 R
TOYOTA	T1137	85*105*13 L	TOYOTA	T1195	30*42*7 R
TOYOTA	T1138	45*62*8	TOYOTA	T1196	35*55*9/15.5 W
TOYOTA	T1139	18*30*8	TOYOTA	T1197	54*66*7.5/10
TOYOTA	T1140	30*40*7	TOYOTA	T1198	56*73/77.7*14
TOYOTA	T1141	25*38*7	TOYOTA	T1202	T1202
TOYOTA	T1143	33*44*8	TOYOTA	T1203	38*74*11/18
TOYOTA	T1145	110*154*12/34	TOYOTA	T1204	38*58*11
TOYOTA	T1147	48*74*10	TOYOTA	T1205	04422–12020 KIT
TOYOTA	T1148	48*62*8	TOYOTA	T1208	57*81*8/11
TOYOTA	T1149	55*82*10	TOYOTA	T1209	48*73*7
TOYOTA	T1150	35*55*11	TOYOTA	T1210	38*50*6 R
TOYOTA	T1152	25*38*8	TOYOTA	T1211	75*100*8.5 L
TOYOTA	T1153	32*40*5	TOYOTA	T1212	90*110*8.5/10 L
TOYOTA	T1154	19*32*7/8	TOYOTA	T1213	42*60*6 R
TOYOTA	T1155	38*58*11	TOYOTA	T1214	43*65*8
TOYOTA	T1156	42*60*9	TOYOTA	T1216	45*68*8
TOYOTA	T1159	38*58*18	TOYOTA	T1217	105*120*11 L
TOYOTA	T1162	48*72*8.5	TOYOTA	T1218	38*52*7
TOYOTA	T1163	32*52*8	TOYOTA	T1219	SEAL KIT
TOYOTA	T1166	04422–32010 KIT	TOYOTA	T1225	58*72*7 R
TOYOTA	T1167	42*55*6	TOYOTA	T1226	58*75*9/14.5 R
TOYOTA	T1168	04422–20010 KIT	TOYOTA	T1227	35*48*7 R
TOYOTA	T1169	41*55*6	TOYOTA	T1228	35*50*9.5 W
TOYOTA	T1170	75*108*10/19.5	TOYOTA	T1231	61*76*7/10
TOYOTA	T1171	38.5*58*8.5 R	TOYOTA	T1232	56*78*7.5/13
TOYOTA	T1172	70*92*8.5 L	TOYOTA	T1233	48*70*12 R
TOYOTA	T1173	35*49*6 R	TOYOTA	T1234	52*70*8.5 R

BRAND	PART NO.	SIZE	BRAND	PART NO.	SIZE
TOYOTA	T1236	62*85*8/17	TOYOTA	T1314	38*50*8 R
TOYOTA	T1237	58*70*7	TOYOTA	T1316	43*60*7 R
TOYOTA	T1238	48*75/83*10/18	TOYOTA	T1317	45*62*9 R
TOYOTA	T1240	T1240	TOYOTA	T1318	35*49*6 R NBR
TOYOTA	T1241	32*42*5	TOYOTA	T1319	38*63*9*15.5
TOYOTA	T1242	32*40*5	TOYOTA	T1323	25.5*37.5*6 R
TOYOTA	T1244	25*38*7/8	TOYOTA	T1324	75*107*8 L
TOYOTA	T1245	56*75*6.5/11	TOYOTA	T1325	34*56*9/15 L
TOYOTA	T1246	52*75*7.5/12	TOYOTA	T1328	35*57*9/15
TOYOTA	T1247	34*54*9/15.5	TOYOTA	T1330	40*58*11 L
TOYOTA	T1249	23*34*6.5	TOYOTA	T1333	69*86/101*7/15
TOYOTA	T1250	42*60*7 R	TOYOTA	T1334	90*108/111*10/12
TOYOTA	T1251	19*32*6/7	TOYOTA	T1340	41*61*9/13.5 W
TOYOTA	T1252	26*38*6.5 SC4	TOYOTA	T1341	50*68*9/14 R
TOYOTA	T1254	56*73/77.7*14	TOYOTA	T1344	48*68*7 R
TOYOTA	T1259	11*22*7	TOYOTA	T1348	32*42*5
TOYOTA	T1260	15*25*7	TOYOTA	T1352	38*50*6 R
TOYOTA	T1261	20*32*5 R	TOYOTA	T1354	73.5*89*8.5 L
TOYOTA	T1262	32*46*6 R	TOYOTA	T1356	89*105*10 L
TOYOTA	T1264	70*92*8.5 L	TOYOTA	T1357	88*106*9 L
TOYOTA	T1266	80*100*8.5 L	TOYOTA	T1362	42*55*8 R
TOYOTA	T1268	38*50*6 R	TOYOTA	T1363	40*64*8/15 R
TOYOTA	T1269	22*34*6.5 R	TOYOTA	T1364	35*54*9/21 R
TOYOTA	T1270	85*105*10 L	TOYOTA	T1366	50*80*10.8/17.3 L
TOYOTA	T1271	35*63*9/15.5 W	TOYOTA	T1367	38*50*8 R
TOYOTA	T1272	34*63*9/15 L	TOYOTA	T1371	35*50*9.5 W
TOYOTA	T1274	58*78*10/14 L	TOYOTA	T1379	41*74*11/18 W
TOYOTA	T1275	50*70*10/16 R	TOYOTA	T1380	47*80*10/16.5 W
TOYOTA	T1277	50*72*9/14 R	TOYOTA	T1381	47*69*10/16 W
TOYOTA	T1278	95*115*9.5/12 L	TOYOTA	T1390	40.5*54.5*7 R
TOYOTA	T1280	80*100*10 L	TOYOTA	T1391	32*53*7 R
TOYOTA	T1283	18*30*7 R	TOYOTA	T1401	50*68*9/14 R
TOYOTA	T1286	43*70*9/15.5	TOYOTA	T1417	78*110*8.5 L
TOYOTA	T1293	52*70*8.5 R	TOYOTA	T1418	34*63*9/15 L
TOYOTA	T1294	99*119*9.5 L	SYM	91255-L4A-000	41*54*11
TOYOTA	T1295	75*100*10 RHF	SUZUKI	09241-47002	47*8
TOYOTA	T1297	43*60*7 R	SUZUKI	09282-10012	10*20*6
TOYOTA	T1301	40*55*6 RM	SUZUKI	09282-48003	47*62*9
TOYOTA	T1308	68*92*9.7MIN QTY500	SUZUKI	09283-20024	20*35*7
TOYOTA	T1309	78*115*10/19.5	SUZUKI	09283-20028	20*47*8.5 R

SOG&H.T Automobile Oil Seal

BRAND	PART NO.	SIZE	BRAND	PART NO.	SIZE
SUZUKI	09283–20040	20*35*5.5	SUZUKI	09283–44011	44*62*8/14
SUZUKI	09283–25035	25*40*7	SUZUKI	09283–45005	45*63*7.5 R
SUZUKI	09283–25076	25*45*5	SUZUKI	09283–45011	45*63*7.5 R
SUZUKI	09283–25077	25*38*6 R	SUZUKI	09283–45012	45*63*7.5 R
SUZUKI	09283–26010	26*38*7	SUZUKI	09283–48003	48*62*9 R
SUZUKI	09283–26016	26*38*8	SUZUKI	09283–48007	47*62*9
SUZUKI	09283–26018	26*40*5	SUZUKI	09283–49002	49*62*8/11
SUZUKI	09283–27006	27*40*8	SUZUKI	09283–50001	50*68*7/9
SUZUKI	09283–28010	28*47*10 R	SUZUKI	09283–50002	50*68*7/9
SUZUKI	09283–28022	28*47*7	SUZUKI	09283–50005	50*65*7/10
SUZUKI	09283–30038	30*54*9	SUZUKI	09283–53001	53*68.2*7
SUZUKI	09283–30055	30*54*9	SUZUKI	09283–54001	54*69*7.5/10
SUZUKI	09283–32002	32*47*8 R	SUZUKI	09283–56002	56*72.2*8/10
SUZUKI	09283–32003	32*47*8 R	SUZUKI	09283–59001	59*88*8/13.5 W
SUZUKI	09283–32016	32*47*8 R	SUZUKI	09283–60003	60*80*8 L
SUZUKI	09283–32022	32*47*8 R	SUZUKI	09283–60004	60*80*8 L
SUZUKI	09283–32025	32*47*8 R	SUZUKI	09283–60005	60*80*8 L
SUZUKI	09283–32026	32*47*6 R	SUZUKI	09283–68001	68*86*8 L
SUZUKI	09283–32038	32*47*6 R	SUZUKI	09283–68002	68*86*8 L
SUZUKI	09283–32042	32*47*6 R	SUZUKI	09284–45001	45*59*8
SUZUKI	09283–35006	35*80*9 L	SUZUKI	09285–00002	85*112*10.5
SUZUKI	09283–35008	35*62*10/16.5	SUZUKI	09285–05002	5.5*16*8
SUZUKI	09283–35008	35*62*10/16.5	SUZUKI	09285–12002	12*22*9
SUZUKI	09283–35013	35*72*7.5/9.5	SUZUKI	09285–14001	14*24*6
SUZUKI	09283–35022	35*72*7.5/9.5	SUZUKI	09286–75001	75*87*7
SUZUKI	09283–35024	35*62*9	SUZUKI	09286–75001	75*89*4/7
SUZUKI	09283–35025	35*62*9	SUZUKI	09289–14001	14*25/26/35*19
SUZUKI	09283–35037	35*62*9	SUZUKI	09289–20009	20*34*6.5 NK7CS
SUZUKI	09283–35040	35*47*6 R	SUZUKI	09289–36002	36*72*7/9
SUZUKI	09283–35047	35*47*6 R	SUZUKI	09823–28010	28*47*10 R
SUZUKI	09283–40012	40*72*9/15	SUZUKI	11179–71C01	26.5*41*10
SUZUKI	09283–40013	40*72*10/16.5	SUZUKI	12311–67011	44*72*7
SUZUKI	09283–40022	40*72*11/18.5	SUZUKI	24151–60B00	20*35*7
SUZUKI	09283–40027	40*72*11/18.5	SUZUKI	24151–73B00	20*35*5.5
SUZUKI	09283–40028	40*58*10	SUZUKI	24780–79001	28*38*10/15 L
SUZUKI	09283–42008	42*55*7	SUZUKI	24780–83000	32*42*10/15 L
SUZUKI	09283–44006	44*62*7/12.5	SUZUKI	24780–83010	32*42*10/12.5 L
SUZUKI	09283–44007	44*62*7/12.5	SUZUKI	27371–53F00	35*55*11
SUZUKI	09283–44008	44*62*8/14	SUZUKI	27431–50A00	30*54*9
SUZUKI	09283–44009	44*62*8/14	SUZUKI	27431–73B20	35*52*8

SOG&H.T Automobile Oil Seal

BRAND	PART NO.	SIZE	BRAND	PART NO.	SIZE
SUZUKI	27432–60B01	35*52*9.5	SUZUKI	Z6107	28*47*10 R
SUZUKI	27432–70C00	38*54*8	SUZUKI	Z6108	47*62*9
SUZUKI	29971–80050	38*60*8/14.5	SUZUKI	Z6109	40*72*9/15
SUZUKI	29971–80051	38*60*8/14.5	SUZUKI	Z6110	50*68*7/9
SUZUKI	43430–60810	SEAL KIT	SUZUKI	Z6111	26*38*8
SUZUKI	43431–60G00	49*81.4*36.5	SUZUKI	Z6113	35*80/84*9 L
SUZUKI	43446–82CB0	44*54*7	SUZUKI	Z6114	36*72*7/9
SUZUKI	43491–50F00	50*68*7/10.5	SUZUKI	Z6116	44*72*7
SUZUKI	43592–52D00	51*65*9 W14	SUZUKI	Z6119	60*80*8 L
SUZUKI	43592–52D00	51*65*9 W	SUZUKI	Z6120	44*62*8/13.5
SUZUKI	51153–05320	32*44*10.5	SUZUKI	Z6121	53*68.2*7
SUZUKI	51153–08C20	37*49*8/9.5	SUZUKI	Z6123	50*65*7/10
SUZUKI	51153–23F00	26*37*10.5	SUZUKI	Z6124	35*62*9
SUZUKI	96057747	75*89*4/7	SUZUKI	Z6125	32*47*6 R
SUZUKI	NJ 198	75*89*4/7	SUZUKI	Z6126	68*86*8 L
SUZUKI	NJ 336	32*47*8 R	SUZUKI	Z6127	44*62*8/14
SUZUKI	NJ 337	60*80*8 L	SUZUKI	Z6128	49*62*8/11
SUZUKI	NJ 377	32*47*6 R	SUZUKI	Z6129	20*35*5.5
SUZUKI	NJ 378	68*86*8 L	SUZUKI	Z6132	38*50*8 R
SUZUKI	NJ 701	50*68*7/9	SUZUKI	Z6133	35*55*11
SUZUKI	NJ 740	35*62*10/16.5	SUZUKI	Z6134	50*68*7/10.5
SUZUKI	NJ 757	20*47*8.5 R	SUZUKI	Z6135	35*47*6 R
SUZUKI	NJ 758	20*35*5.5	SUZUKI	Z6136	35*52*8
SUZUKI	NJ 759	28*47*10 R	SUZUKI	Z6137	54*69*7.5/10
SUZUKI	NJ 761	35*62*9	SUZUKI	Z6138	75*89*4/7
SUZUKI	NJ 849	26*38*8	SUZUKI	Z6141	56*72.2*8/10
SUZUKI	NJ 850	30*54*9	SUZUKI	Z6142	35*62*10/16.5
SUZUKI	NJ 851	35*72*7.5/9.5	SUZUKI	Z6143	45*59*8
SUZUKI	NJ 853	40*72*9/15	SUZUKI	Z6144	47*62*9
SUZUKI	NJ 854	44*62*7/12.5	SUZUKI	Z6145	40*72*11/18.5
SUZUKI	NJ 855	28*38*10/15 L	SUZUKI	Z6148	25*38*6 R
SUZUKI	NJ 856	38*60*8/14.5	SUZUKI	Z6155	35*47*6 R
SUZUKI	NJ 912	53*68.2*7	SUZUKI	Z6158	45*63*7.5 R
SUZUKI	NJ 961	40*72*10/16.5	SUZUKI	Z6162	40*58*10
SUZUKI	NJ 962	32*42*10/15 L	SUZUKI	Z6164	28*47*7
SUZUKI	Z6101	20*35*7	SUZUKI	Z6173	51*65*9 W
SUZUKI	Z6102	35*72*7.5/9.5	SUZUKI	Z6175	35*62*10/16.5
SUZUKI	Z6104	42*55*7	SUZUKI	Z6184	32*42*10/12.5 L
SUZUKI	Z6105	20*47*8.5 R	SUZUKI	Z6195	47*8
SUZUKI	Z6106	28*38*10/15 L	SUZ/HON	90756–118–000	27*39*10.5

SOG&H.T Automobile Oil Seal

BRAND	PART NO.	SIZE	BRAND	PART NO.	SIZE
SUBARU	0624-30508	30*50*8	SUBARU	8067-38100	38.5*53*8 R
SUBARU	0624-38558	38*55*8	SUBARU	8067-42160	42*55*8 R
SUBARU	0624-40528	40*52*8	SUBARU	8067-70011	70*87*8.5 L
SUBARU	28015-AA001	50*65.3*8	SUBARU	8067-70012	70*87*8.5 L
SUBARU	28015-AA011	50*67*5.5/7.5	SUBARU	8067-70013	70*87*8.5 L
SUBARU	28015-AA021	56*72.3*8/12	SUBARU	8067-76010	76*93*10 L
SUBARU	28015-AA050	50*65.3*8	SUBARU	8067-76011	76*93*10 L
SUBARU	28015-AA070	56*72.3*8	SUBARU	8067-86010	86*103*10 L
SUBARU	28015-AA080	56*72.3*8/12	SUBARU	8067-86040	86*103*10 L
SUBARU	28015-AA090	50*65.3*8	SUBARU	90625-0015	52*72*7.5/16
SUBARU	28015-AA100	50*62*7	SUBARU	90625-0018	58*76*7.8/16
SUBARU	28015-AA110	50*67*5.5/7.5	SUBARU	90625-0020	56*72.3*8
SUBARU	6210-28060	50*62*7	SUBARU	90639-0005	37*62*10/11.5
SUBARU	6230-02020	57*67*7	SUBARU	9067-33030	33*49*8 R
SUBARU	6230-21042	40*62*6.5	SUBARU	NJ 577	40*52*8
SUBARU	7230 34040	50*67*10/13	SUBARU	NJ 847	52*72*7.5/16
SUBARU	7230-34000	50*67*9/13	SUBARU	NJ 848	58*76*7.8/16
SUBARU	7230-34010	32*52*7	SUBARU	NK 153	33*49*8 R
SUBARU	7230-34020	44.8*64*6.5	SUBARU	S4870	52*72*7.5/16
SUBARU	7230-34030	37*62*7	SUBARU	S4872	40*52*8
SUBARU	7230-34040	50*67*9/13	SUBARU	S4873	57*67*7
SUBARU	8067-19010	20*35*7	SUBARU	S4874	50*62*7
SUBARU	8067-20060	20*40*10	SUBARU	S4876	58*76*7.8/16
SUBARU	8067-20090	20*35*8	SUBARU	S4877	22*40*10
SUBARU	8067-22050	22*40*10	SUBARU	S4878	70*87*8.5 L
SUBARU	8067-23010	23*40*7	SUBARU	S4879	76*93*10 L
SUBARU	8067-27030	27*45*9	SUBARU	S4880	38*59*9 R
SUBARU	8067-27040	27*45*9	SUBARU	S4881	56*72.3*8/12
SUBARU	8067-30021	30*46*8	SUBARU	S4881	56*72.3*8/12
SUBARU	8067-30150	30*46*8 R	SUBARU	S4882	56*72.3*8
SUBARU	8067-32030	32*52*11/15.5	SUBARU	S4883	50*67*5.5/7.5
SUBARU	8067-32050	32*45*8	SUBARU	S4884	50*65.3*8
SUBARU	8067-32150	32*45*8 R	SUBARU	S4887	32*45*8 R
SUBARU	8067-32160	32*55*8.5 R	SUBARU	S4888	33*49*8 R
SUBARU	8067-33010	33*49*8 R	SUBARU	S4888	33*49*8 R
SUBARU	8067-33030	33*49*8 R	SUBARU	S4889	86*103*10 L
SUBARU	8067-35070	35*55*11	SUBARU	S4892	86*103*10 L
SUBARU	8067-35130	35*67*12/18	SUBARU	S4894	42*55*8 R
SUBARU	8067-38040	38*55*9 R	SUBARU	S4895	32*55*8.5 R
SUBARU	8067-38070	38*59*9 R	SUBARU	S6500	30*50*8

SOG&H.T Automobile Oil Seal

BRAND	PART NO.	SIZE	BRAND	PART NO.	SIZE
SUBARU	S6501	40*62*6.5	NISSAN	12279-76200	SPLIT SEAL
SUBARU	S6502	37*62*10/11.5	NISSAN	12279-77A05	84*104*11 L
SUBARU	S6504	38*55*8	NISSAN	12279-77A10	84*104*11 L
SUBARU	S6505	20*35*7	NISSAN	12279-85G00	80*100*10 L
SUBARU	S6509	50*67*9/13	NISSAN	12279-85Y00	84*104*11 L
SUBARU	S6510	32*52*7	NISSAN	12279-95000	120*140*13 L
SUBARU	S6512	37*62*7	NISSAN	12279-95004	120*140*13
SUBARU	S6514	27*45*9	NISSAN	12279-95F0A	84*104*8.5 L
SUBARU	S6516	44.8*64*6.5	NISSAN	12279-96000	125*150*14 L
SUBARU	S6518	30*46*8 R	NISSAN	12279-96006	126*150*14 L
SUBARU	S6519	38.5*53*8 R	NISSAN	12279-97000	125*150*14 L
SCANIA	1 313 719	75*100*12/14	NISSAN	12279-97001	125*150*14 L
SCANIA	1 409 890	75*100*12/14	NISSAN	12279-A4600	80*100*13 L
OPEL	90 289 512	35*54*10/15 W2	NISSAN	12279-AD205	84*104*8.5 L
OPEL	90182165	35*54*10/15 W2	NISSAN	12279-BX00A	84*104*8.5 L
NISSAN	09061-0001P	68*82*7	NISSAN	12279-D0100	84*104*11 L
NISSAN	09062-0020P	42*76*12/21	NISSAN	12279-H1000	60*82*12 L
NISSAN	12278-90006	62*85*13 R	NISSAN	12279-H2300	60*82*12 L
NISSAN	12278-90016	62*85*13 R	NISSAN	12279-H2301	60*82*12 L
NISSAN	12278-97000	70*88*8	NISSAN	12279-H2310	60*82*12 L
NISSAN	12278-T9000	62*85*12.5 R	NISSAN	12279-H2311	60*82*12 L
NISSAN	12278-T9001	105*135*12.5 L	NISSAN	12279-J2001	105*135*12.5 L
NISSAN	12278-Z5500	60*82*12	NISSAN	12279-R4600	80*100*13 L
NISSAN	12279-01B00	75*94*10 L	NISSAN	12279-R4601	80*100*13 L
NISSAN	12279-01B01	75*94*10 L	NISSAN	12279-R4610	80*100*13 L
NISSAN	12279-01B11	75*94*10 L	NISSAN	12279-R4611	80*100*13 L
NISSAN	12279-01M00	80*100*10 L	NISSAN	12279-T7200	80*100*10 L
NISSAN	12279-01T00	105*135*12.5 L	NISSAN	12279-T7201	80*100*10 L
NISSAN	12279-0M300	84*104*8.5 L	NISSAN	12279-T7202	80*100*10 L
NISSAN	12279-0T001	108*135*9 L	NISSAN	12279-T7203	80*100*10 L
NISSAN	12279-18010	60*82*12 L	NISSAN	12279-V1700	80*100*10 L
NISSAN	12279-18V00	84*104*11 L	NISSAN	12279-Z5001	105*135*12.5 L
NISSAN	12279-1N510	84*104*8.5 L	NISSAN	12279-Z5503	110*135*9 L
NISSAN	12279-42L00	80*100*10 L	NISSAN	12279-Z5503	111*135*9 L
NISSAN	12279-43G00	86*100*10 L	NISSAN	13042-01M00	40*55*9 R
NISSAN	12279-43G02	86*100*10 L	NISSAN	13042-05E01	50*65*8 R
NISSAN	12279-55900	85*104*8.5 L	NISSAN	13042-16A05	34*48*8 R
NISSAN	12279-55Y00	84*104*8.5 L	NISSAN	13042-16A10	36*50*8 L
NISSAN	12279-5L300	80*100*8.5 L	NISSAN	13042-16V00	40*52*7 R
NISSAN	12279-5L310	80*100*8.5 L	NISSAN	13042-18000	38*55*9 R

SOG&H.T Automobile Oil Seal

BRAND	PART NO.	SIZE	BRAND	PART NO.	SIZE
NISSAN	13042-32200	45*68*12	NISSAN	13510-88G00	33*47*7 R
NISSAN	13042-42L00	40*52*7 R	NISSAN	13510-88G10	33*47*7 R
NISSAN	13042-73000	48*70*9 R	NISSAN	13510-AD200	50*62*7
NISSAN	13042-76200	58*80*12 R	NISSAN	13510-D0100	33*47*8 R
NISSAN	13042-A3500	48*70*9 R	NISSAN	13510-E0700	45*68*12 R
NISSAN	13042-A3510	48*70*9 R	NISSAN	13510-ED000	40*52*7 R
NISSAN	13042-A8600	48*70*9 R	NISSAN	13510-H1000	38*55*9 R
NISSAN	13042-B3000	39.7*62*11 R	NISSAN	13510-H1010	38*55*9 R
NISSAN	13042-D0100	34*48*8 R	NISSAN	13510-R2000	42*55*9 R
NISSAN	13042-D0101	34*48*8 R	NISSAN	13510-V5000	38*47*7 R
NISSAN	13042-E0700	45*68*12	NISSAN	13510-V7200	40*52*7 R
NISSAN	13042-L1401	70*95*13 W	NISSAN	13510-V7202	40*52*7 R
NISSAN	13042-T7200	58*80*12	NISSAN	14515-99002	30*50*10
NISSAN	13043-43700	50*72*12	NISSAN	14515-99009	35*50*8
NISSAN	13043-76200	58*80*12 R	NISSAN	14658-61501	15*30*8
NISSAN	13043-T7200	58*80*12	NISSAN	16325-63011	43*50*6
NISSAN	13168-01M00	32*50*8 R	NISSAN	21421-22001	35*48*8 R
NISSAN	13276-0M300	27*49*11	NISSAN	26134-6401P	57*73*7
NISSAN	13276-4F100	27*49*11	NISSAN	29541-80051	25*39.5*9.5
NISSAN	13276-53Y00	27*49*11	NISSAN	29972-80050	38*50*8
NISSAN	13276-53Y0A	27*49*11	NISSAN	30402-M0101	28*40*8
NISSAN	13276-53Y10	27*49*11	NISSAN	30402-M7000	28*40*8
NISSAN	13276-53Y11	27*49*11	NISSAN	30403-90004/7	28.98*36.91*5.16
NISSAN	13510-01B00	38*54*7	NISSAN	31336-X0101	35*50*11 L
NISSAN	13510-01M00	36*49*7 R	NISSAN	31375-8E002	46*61*6.5 R
NISSAN	13510-05E00	45*58*8 R	NISSAN	32113-01B00	20*35*8
NISSAN	13510-16A00	33*47*8 R	NISSAN	32113-03E00	27.9*43*8 R
NISSAN	13510-18V10	33*47*7 R	NISSAN	32113-13200	24*40*8
NISSAN	13510-19V00	40*52*7 R	NISSAN	32113-14601	34*50*7
NISSAN	13510-40F00	46*58*7 R	NISSAN	32113-86400	28*40*8
NISSAN	13510-43G00	58*80*10	NISSAN	32113-86401	28*40*8
NISSAN	13510-43G00	58*80*10 R	NISSAN	32113-H3100	24*40*8
NISSAN	13510-43G01	58*80*7	NISSAN	32113-M8000	25*40*8
NISSAN	13510-53J00	46*58*7 R	NISSAN	32113-N2101	34*50*7 R
NISSAN	13510-53J01	46*58*7 R	NISSAN	32114-Y4000	30*45*8
NISSAN	13510-53J11	46*58*7 R	NISSAN	32115-C0400	58*75*9
NISSAN	13510-6N210	46*58*7 R	NISSAN	32136-01G10	42*58*9.5 L
NISSAN	13510-77A05	40*52*7 R	NISSAN	32136-07200	35*50*12
NISSAN	13510-77A10	40*52*7 R	NISSAN	32136-18000	30*45*30
NISSAN	13510-78200	45*68*12	NISSAN	32136-18001	30*45*8/30

SOG&H.T Automobile Oil Seal

BRAND	PART NO.	SIZE	BRAND	PART NO.	SIZE
NISSAN	32136-53000	63.5*85*12	NISSAN	38189-02700	35*64*13
NISSAN	32136-90002	70*88*12	NISSAN	38189-18000	32*58*12
NISSAN	32136-90007	70*88*12 L	NISSAN	38189-31300	42*72.5*12 R
NISSAN	32136-90017	70*88*12 L	NISSAN	38189-50000	64*85*12
NISSAN	32136-90062	70*88*12	NISSAN	38189-59M00	60*75*9
NISSAN	32136-90063	80*100*13 L	NISSAN	38189-61000	45*75*12 R
NISSAN	32136-90102	70*88*12 L	NISSAN	38189-61001	45*75*12 R
NISSAN	32136-C0400	55*70*9	NISSAN	38189-61500	56*72*9
NISSAN	32136-E0100	35*50*12	NISSAN	38189-90000	105*135*14 L
NISSAN	32136-G1000	30*45/62*15/41 L	NISSAN	38189-90002	70*115*15
NISSAN	32136-G1001	30*45/62*15/41 L	NISSAN	38189-90005	70*115*15
NISSAN	32136-H5000	30*45/77*45 L	NISSAN	38189-90007	85*125*14
NISSAN	32136-H5010	30*45/77*45 L	NISSAN	38189-90009	65*95*14
NISSAN	32136-H8900	30*45/77*45 L	NISSAN	38189-90016	80*135*12/26.5
NISSAN	32136-J2000	40*62*11	NISSAN	38189-90018	80*135/146*15/25.5 R
NISSAN	32136-J6500	40*62*11	NISSAN	38189-90101	105*135*14/21 R
NISSAN	32136-U0100	35*50*11 L	NISSAN	38189-90105	105*135*14/21 R
NISSAN	32136-Z5000	58*75*9	NISSAN	38189-A6100	35*64*13 R
NISSAN	32136-Z5001	58*75*9	NISSAN	38189-C7000	42*76*12/21
NISSAN	32136-Z5002	58*75*9	NISSAN	38189-C7123	42*76/83*13.5/21 R
NISSAN	32219-90002	42*65*9	NISSAN	38189-J2000	42*72.5*12 R
NISSAN	32219-90004	42*55*9	NISSAN	38189-N3100	40*75*12/17.5 R
NISSAN	32219-90009	48*65*9 R	NISSAN	38189-P0101	45*75*12 R
NISSAN	32219-90012	42*55*9	NISSAN	38189-U3000	35*67*12/18 R
NISSAN	32219-90013	48*65*9 R	NISSAN	38212-73000	34*55*11
NISSAN	32219-90014	48*65*9 R	NISSAN	38212-90003	60*72*7.5
NISSAN	32219-90018	56*72*9 R	NISSAN	38212-90006	60*72*7.5
NISSAN	32219-Z5000	32*45*8	NISSAN	38212-90008	51*62*7
NISSAN	32219-Z5003	32*45*8	NISSAN	38212-95960	44*68*12.5
NISSAN	32219-Z5004	32*45*8	NISSAN	38212-Z5000	47*56*7
NISSAN	33111-31X00	60*76*9	NISSAN	38332-21100	35*67*12/18
NISSAN	33111-56E00	60*78*9	NISSAN	38342-00QAG	40*55*8/14 W
NISSAN	33111-C8000	45*68*8	NISSAN	38342-01B00	38*58*11/17
NISSAN	33140-33G02	42*66*10	NISSAN	38342-03E00	39*59*11/17
NISSAN	33142-01J01	50*72.5*12/19.5	NISSAN	38342-03E01	33*59*11/17
NISSAN	33142-33G10	42*66*10	NISSAN	38342-21000	32*52*11/15.5
NISSAN	33216-01J00	50*72.5*12/19.5	NISSAN	38342-31X00	40*56*8/13.5
NISSAN	37520-58000	52*80*8	NISSAN	38342-31X01	33*56*8/13
NISSAN	37526-90000	55*75*12	NISSAN	38342-81X00	39*59*11/17
NISSAN	37526-90002	60*82*12	NISSAN	38342-81X01	33*59*11/17

SOG&H.T Automobile Oil Seal

BRAND	PART NO.	SIZE	BRAND	PART NO.	SIZE
NISSAN	38342-8H500	39*59*11/17	NISSAN	40232-01J00	60*70*11/17
NISSAN	38342-D2100	40*65/56*20	NISSAN	40232-16500	48*62*11
NISSAN	38342-M3000	36*55*11/16	NISSAN	40232-18000	38*52*9.5
NISSAN	38342-M8001	40*56*8	NISSAN	40232-21000	43*55*7.5
NISSAN	38342-N3100	35*55*11/18	NISSAN	40232-21B00	52*68*8/11.7
NISSAN	38342-P9000	35*55*11/18	NISSAN	40232-30F00	46*69.4*11/16
NISSAN	39252-52A00	52*78.4*9.5	NISSAN	40232-31G00	57*79*9.5/13.5
NISSAN	39252-52A10	52*78.4*9.5	NISSAN	40232-32201	48*65*7
NISSAN	40227-01E00	56*72*10	NISSAN	40232-33P00	56*76/80*6.3/12
NISSAN	40227-01E01	56*72*10	NISSAN	40232-33P10	56*76/80*6.3/12
NISSAN	40227-0M000	56*74.2/78.2*8/10.5	NISSAN	40232-33P50	56*76/80*6.3/12
NISSAN	40227-0T000	77*91/96*6/11	NISSAN	40232-33P55	56*76/80*6.3/12
NISSAN	40227-21B00	48*62/66.5*10	NISSAN	40232-3S600	54*65*10/14+NYLON
NISSAN	40227-32201	48*65*7	NISSAN	40232-3S601	54*65*10/14+NYLON
NISSAN	40227-41W03	60*90*22	NISSAN	40232-41L00	46*69.4*11/16
NISSAN	40227-44001	65*88*11.5	NISSAN	40232-50W00	57*79*10.5/16
NISSAN	40227-50W00	50*72/83*16.2	NISSAN	40232-50W01	57*79*10.5/16
NISSAN	40227-50W01	50*72/83*16.2	NISSAN	40232-50Y00	55*68/73*8/11.5
NISSAN	40227-50Y00	56*74.2/78.2*8/10.5	NISSAN	40232-50Y10	55*68/73*8/11.5
NISSAN	40227-50Y01	56*74.2/78.2*8/10.5	NISSAN	40232-51E00	56*72/77*8/11
NISSAN	40227-50Y11	56*74.2/78.2*8/10.5	NISSAN	40232-51E10	56*72/77*8/11
NISSAN	40227-73000	48*65*10	NISSAN	40232-A0101	48*62*6
NISSAN	40227-90001	130*150*10	NISSAN	40232-B9500	54*65*13
NISSAN	40227-90004	140*170*14	NISSAN	40232-C0400	85*111*10
NISSAN	40227-C6000	65*88*11/16.5	NISSAN	40232-D0101	52*70*7.5
NISSAN	40227-C6079	65*88*10/15.7	NISSAN	40232-D0112	52*70*7.5
NISSAN	40227-C8200	65*88*9/18	NISSAN	40232-M0205	48*62*7
NISSAN	40227-C8200 92-93'	65*88*9/18	NISSAN	40232-M0215	48*62*7
NISSAN	40227-D0101	56*72*12.5	NISSAN	40232-M5600	52*67*7
NISSAN	40227-J5110	60*82*7	NISSAN	40232-M5610	52*67*7/8.5
NISSAN	40227-M3000	48*62*13	NISSAN	40232-M5611	52*67*7/8.5
NISSAN	40227-M3005	48*62*13	NISSAN	40232-M5661	52*67*7/8.5
NISSAN	40227-M5601	52*68*13	NISSAN	40232-N7100	46*59.1*12
NISSAN	40227-M5605	52*68*13	NISSAN	40533-01J00	34*44*10
NISSAN	40227-Z5000	100*114*12	NISSAN	40533-C6000	33*66*13 W
NISSAN	40227-Z5001	100*114*12	NISSAN	43090-00Z00	154*175/180*13.5/14.
NISSAN	40228-01J10	95*104/145*14.2	NISSAN	43090-58000	95*135*13
NISSAN	40232-01E01	56*72/77*8/11	NISSAN	43090-90000	124*170*14.5
NISSAN	40232-01G00	54*75.5*12/18+NYLON	NISSAN	43090-90012	140*170*14
NISSAN	40232-01G10	54*75.5*12/18+NYLON	NISSAN	43090-90014	154*175*13

SOG&H.T Automobile Oil Seal

BRAND	PART NO.	SIZE	BRAND	PART NO.	SIZE
NISSAN	43090-90017	154*175*13	NISSAN	43252-J0300	40*62*11
NISSAN	43090-90060	154*175*13	NISSAN	43252-J2000	38*47*10
NISSAN	43090-90061	154*175/180*13.5/14.	NISSAN	43252-M0200	39*51*7.5
NISSAN	43090-Z5000	130*150*10	NISSAN	43252-M7000	43*54*7.5
NISSAN	43090-Z5001	127*146*10	NISSAN	43252-M7001	43*54*7.5
NISSAN	43090-Z5001	127*146*10	NISSAN	43252-T3200	38*62*11
NISSAN	43090-Z5002	127*146*10	NISSAN	43252-T6200	33*44*8
NISSAN	43204-60020	43204-60020	NISSAN	43252-T9300	40*49*10.3
NISSAN	43204-60040	43204-60040	NISSAN	43252-VR200	35*55*11 W10
NISSAN	43213-76000	78.4*95*8	NISSAN	43252-VW000	35*55*11 W10
NISSAN	43223-30100	74*95*7	NISSAN	43254-0T000	51*94*9.6/12.3
NISSAN	43232-01G00	50*70/77*12.5/17.5	NISSAN	48029-04100	17*31*7
NISSAN	43232-01G10	50*70/77*12.5/17.5	NISSAN	48029-92G00	18*30*8
NISSAN	43232-01J00	67*90*12.5/20	NISSAN	48029-H5000	17*30*7
NISSAN	43232-01J10	67*90*12.5/20	NISSAN	48029-W0501	17.5*32*7
NISSAN	43232-0T000	80*101/106*9/10.2	NISSAN	48040-82100	35*48*8
NISSAN	43232-21000	40*62*10	NISSAN	48040-84500	32*43*7
NISSAN	43232-21T00	68*82*7	NISSAN	48125-01E00	17*30*8
NISSAN	43232-42G10	56*74/83*10/13.5	NISSAN	48125-11A00	17.5*32*6
NISSAN	43232-50A00	40*52/58.5*10	NISSAN	48125-60R00	16*26*7
NISSAN	43232-50A10	40*52/58.5*10	NISSAN	48125-78500	17*35*8.5
NISSAN	43232-78100	35*55*11	NISSAN	48125-S5001	19*32*8
NISSAN	43232-9C500	56*74/83*10/13.5	NISSAN	48137-01G10	28.6*40*8
NISSAN	43232-B5000	50*67*11	NISSAN	48137-16500	24*35*8
NISSAN	43232-E4100	42*72*10	NISSAN	48137-36700	26*40*7
NISSAN	43232-F6100	40*62*9/13	NISSAN	48137-44000	32*45*8
NISSAN	43232-P4500	35*55*11	NISSAN	48137-G4000	28.6*40*8
NISSAN	43232-T6200	65*90*10	NISSAN	48137-H1002	25*38*7
NISSAN	43252-01B00	38*50.3*10	NISSAN	49321-Y0100	28*40*8
NISSAN	43252-01G00	35*55*11	NISSAN	90313-54001	54*64*9/24
NISSAN	43252-03E00	43*54*6	NISSAN	C2113-P9500	31.8*44.5*6.4
NISSAN	43252-03E01	43*54*6	NISSAN	LV 501	SPLIT SEAL
NISSAN	43252-18000	41*56*7	NISSAN	N2000	28*40*8
NISSAN	43252-82100	80*105*13	NISSAN	N2003	40*62*11
NISSAN	43252-B5000	50*67*11	NISSAN	N2007	42*76*12/21
NISSAN	43252-C6000	42*65*11	NISSAN	N2008	68*82*7
NISSAN	43252-EB000	40*72*7	NISSAN	N2017	60*82*12 L
NISSAN	43252-G3200	25*35*7	NISSAN	N2021	126*150*14 RHS
NISSAN	43252-H1000	41*56*7	NISSAN	N2022	48*70*9 R
NISSAN	43252-H1010	41*56*7	NISSAN	N2023	39.7*62*11 R

SOG&H.T Automobile Oil Seal

BRAND	PART NO.	SIZE	BRAND	PART NO.	SIZE
NISSAN	N2028	58*80*12	NISSAN	N2116	78.4*95*8
NISSAN	N2030	45*68*12 R	NISSAN	N2118	74*95*7
NISSAN	N2031	38*55*9 R	NISSAN	N2119	50*67*11
NISSAN	N2032	45*68*12	NISSAN	N2121	40*62*10
NISSAN	N2034	57*73*7	NISSAN	N2123	40*62*11
NISSAN	N2035	28*40*8	NISSAN	N2124	38*47*10
NISSAN	N2036	24*40*8	NISSAN	N2125	41*56*7
NISSAN	N2037	34*50*7 R	NISSAN	N2128	80*105*13
NISSAN	N2038	30*45*8	NISSAN	N2132	17*31*7
NISSAN	N2042	30*45/77*45 L	NISSAN	N2133	17*30*7
NISSAN	N2043	58*75*9	NISSAN	N2135	35*48*8
NISSAN	N2044	30*45/62*15/41 L	NISSAN	N2136	25*38*7
NISSAN	N2045	35*50*11 L	NISSAN	N2140	26*40*7
NISSAN	N2053	32*45*8	NISSAN	N2141	32*45*8
NISSAN	N2057	52*80*8	NISSAN	N2148	35*55*11
NISSAN	N2058	55*75*12	NISSAN	N2152	43*54*7.5
NISSAN	N2059	35*64*13 R	NISSAN	N2154	60*82*7
NISSAN	N2060	42*72.5*12 R	NISSAN	N2156	35*55*11/18
NISSAN	N2062	35*67*12/18	NISSAN	N2159	80*100*13 L
NISSAN	N2063	45*75*12 R	NISSAN	N2160	60*82*12 L
NISSAN	N2070	56*72*9	NISSAN	N2161	80*135*12/26.5
NISSAN	N2071	70*115*15	NISSAN	N2163	48*65*9 R
NISSAN	N2072	85*125*14	NISSAN	N2165	65*88*11/16.5
NISSAN	N2074	47*56*7	NISSAN	N2166	42*65*11
NISSAN	N2078	34*55*11	NISSAN	N2167	38*62*11
NISSAN	N2080	60*72*7.5	NISSAN	N2168	62*85*13 R
NISSAN	N2081	44*68*12.8	NISSAN	N2169	105*135*12.5 L
NISSAN	N2087	32*52*11/15.5	NISSAN	N2170	120*140*13
NISSAN	N2090	48*62*13	NISSAN	N2173	28*40*8
NISSAN	N2091	52*68*13	NISSAN	N2176	19*32*8
NISSAN	N2092	100*114*12	NISSAN	N2178	25*40*8
NISSAN	N2097	48*65*10	NISSAN	N2180	127*146*10
NISSAN	N2100	48*62*6	NISSAN	N2181	58*75*9
NISSAN	N2101	54*65*13	NISSAN	N2182	55*70*9.5
NISSAN	N2102	85*111*10	NISSAN	N2183	42*65*9
NISSAN	N2105	48*62*7	NISSAN	N2184	60*82*12
NISSAN	N2106	52*67*7/8.5	NISSAN	N2186	36*49*7 R
NISSAN	N2107	46*59.1*12/13	NISSAN	N2187	80*100*10 L
NISSAN	N2113	130*150*10	NISSAN	N2188	40*55*9 R
NISSAN	N2115	124*170*14.5	NISSAN	N2189	32*50*8 R

SOG&H.T Automobile Oil Seal

BRAND	PART NO.	SIZE	BRAND	PART NO.	SIZE
NISSAN	N2190	25*35*7	NISSAN	N2255	58*80*10 R
NISSAN	N2191	33*44*8	NISSAN	N2256	86*100*10 L
NISSAN	N2192	65*90*10	NISSAN	N2259	154*175/180*13.5/14.
NISSAN	N2193	40*49*10.3	NISSAN	N2260	52*68*8/11.7
NISSAN	N2195	40*56*8	NISSAN	N2261	48*62/66.5*10
NISSAN	N2196	52*70*7.5	NISSAN	N2262	38*54*7
NISSAN	N2197	56*72*12.5	NISSAN	N2263	75*94*10 L
NISSAN	N2199	140*170*14	NISSAN	N2264	55*68/73*8/11.5
NISSAN	N2200	51*62*7	NISSAN	N2265	56*74.2/78.2*8/10.5
NISSAN	N2201	60*90*18/22	NISSAN	N2266	40*52*7 R
NISSAN	N2204	38*50.3*10	NISSAN	N2268	34*44*10
NISSAN	N2205	95*135*13	NISSAN	N2269	60*70*11/17
NISSAN	N2206	65*95*14	NISSAN	N2270	67*90/100*12/19.5
NISSAN	N2207	17*30*8	NISSAN	N2272	62*85*12.5 R
NISSAN	N2208	80*100*10 L	NISSAN	N2273	105*135*12.5 L
NISSAN	N2210	33*47*8 R	NISSAN	N2274	56*76/80*6.3/12
NISSAN	N2211	84*104*11 L	NISSAN	N2276	77*91/96*6/11
NISSAN	N2212	34*48*8 R	NISSAN	N2277	80*101/106*9/10.2
NISSAN	N2213	56*72/77*8/11	NISSAN	N2278	51*94*9.6/12.3
NISSAN	N2214	56*72*10	NISSAN	N2283	40*56*8/13.5
NISSAN	N2215	43*54*6	NISSAN	N2284	33*56*8/13
NISSAN	N2216	33*66*13 W	NISSAN	N2288	16*26*7
NISSAN	N2221	154*175*13	NISSAN	N2289	84*104*11 L
NISSAN	N2222	35*55*11	NISSAN	N2292	80*100*10 L
NISSAN	N2223	50*70/77*12.5/17.5	NISSAN	N2293	46*58*7 R
NISSAN	N2224	54*75.5/80*18+NYLON	NISSAN	N2299	45*68*8
NISSAN	N2231	57*79*10.5/16	NISSAN	N2300	50*72.5*12/19.5
NISSAN	N2232	50*72/83*16.2	NISSAN	N2303	42*76/83*13.5/21 R
NISSAN	N2233	17.5*32*7	NISSAN	N2305	33*47*7 R
NISSAN	N2235	65*88*9/18	NISSAN	N2310	50*65*8 R
NISSAN	N2236	46*69.4*11/16	NISSAN	N2311	46*58*8 R
NISSAN	N2240	40*52/58.5*10	NISSAN	N2314	18*30*8
NISSAN	N2241	40*62*9/13	NISSAN	N2315	56*74/83*10/13.5
NISSAN	N2244	40*56/65*20	NISSAN	N2315	56*74/83*10/13.5
NISSAN	N2245	52*77/78.4*9.5	NISSAN	N2316	50*72*12
NISSAN	N2247	46*69.4*11/16	NISSAN	N2317	42*66*10
NISSAN	N2249	39*59*11/17	NISSAN	N2319	110*135*9 L
NISSAN	N2250	33*59*11/17	NISSAN	N2320	56*72*9 R
NISSAN	N2251	57*79*9.5/13.5	NISSAN	N2322	80*100*13 L
NISSAN	N2253	56*72/77*8/11	NISSAN	N2323	105*135*14/20

SOG&H.T Automobile Oil Seal

BRAND	PART NO.	SIZE	BRAND	PART NO.	SIZE
NISSAN	N2324	70*88*8	NISSAN	NJ 122	42*72*10
NISSAN	N2328	60*78*9	NISSAN	NJ 126	60*70*11/17
NISSAN	N2332	60*76*9	NISSAN	NJ 132	56*74.2/78.2*8/10.5
NISSAN	N2335	108*135*9 L	NISSAN	NJ 133	55*68/73*8/11.5
NISSAN	N2336	36*50*7	NISSAN	NJ 147	33*59*11/17
NISSAN	N2345	40*52*7 R	NISSAN	NJ 207	27*49*7.5
NISSAN	N2347	54*65*10/14+NYLON	NISSAN	NJ 213	39*59*11/17
NISSAN	N2348	84*104*8.5 L	NISSAN	NJ 219	51*72*10 W
NISSAN	N2349	46*58*7 R	NISSAN	NJ 224	62*85*13 R
NISSAN	N2351	80*100*8.5 L	NISSAN	NJ 227	62*85*13 R
NISSAN	N2352	58*80*7	NISSAN	NJ 228	105*135*12.5 L
NISSAN	N2354	80*135/146*15/25.5 R	NISSAN	NJ 230	125*150*14 L
NISSAN	N2399	154*175/180*13.5/14.	NISSAN	NJ 274	35*55*11
NISSAN	NJ 004	60*82*12 L	NISSAN	NJ 278	45*68*12 R
NISSAN	NJ 021	60*82*12 L	NISSAN	NJ 280	33*47*8 R
NISSAN	NJ 022	38*55*9 R	NISSAN	NJ 283	36*50*8
NISSAN	NJ 033	38*52*9.5	NISSAN	NJ 284	84*104*11 L
NISSAN	NJ 034	30*45*8/30	NISSAN	NJ 285	34*48*8 R
NISSAN	NJ 035	32*58*12	NISSAN	NJ 286	36*49*7 R
NISSAN	NJ 036	41*56*7	NISSAN	NJ 287	80*100*10 L
NISSAN	NJ 038	35*64*13 R	NISSAN	NJ 288	40*55*9 R
NISSAN	NJ 045	48*70*9 R	NISSAN	NJ 297	58*75*9
NISSAN	NJ 049	48*65*7	NISSAN	NJ 363	38*54*7
NISSAN	NJ 050	39.7*62*11 R	NISSAN	NJ 364	75*94*10 L
NISSAN	NJ 051	43*55*7.5	NISSAN	NJ 368	33*47*7 R
NISSAN	NJ 056	80*100*13 L	NISSAN	NJ 369	58*80*12
NISSAN	NJ 078	48*62*6	NISSAN	NJ 371	62*85*12.5 R
NISSAN	NJ 079	34*50*7 R	NISSAN	NJ 372	105*135*12.5 L
NISSAN	NJ 080	35*50*12 L	NISSAN	NJ 382	45*75*12 R
NISSAN	NJ 081	48*65*10	NISSAN	NJ 386	54*65*13
NISSAN	NJ 082	48*62*13	NISSAN	NJ 387	50*67*11
NISSAN	NJ 083	48*62*7	NISSAN	NJ 388	124*170*14.5
NISSAN	NJ 085	30*45/62*15/41 L	NISSAN	NJ 389	60*72*7.5
NISSAN	NJ 086	39*51*7.5	NISSAN	NJ 400	47*56*7
NISSAN	NJ 106	40*62*10	NISSAN	NJ 415	35*48*8
NISSAN	NJ 107	46*59.1*12/13	NISSAN	NJ 416	32*45*8
NISSAN	NJ 110	120*140*13	NISSAN	NJ 417	130*150*10
NISSAN	NJ 117	32*52*11/15.5	NISSAN	NJ 419	43*54*7.5
NISSAN	NJ 118	25*38*7	NISSAN	NJ 441	40*75*12/17 R
NISSAN	NJ 119	26*40*7	NISSAN	NJ 503	70*88*12

SOG&H.T Automobile Oil Seal

BRAND	PART NO.	SIZE	BRAND	PART NO.	SIZE
NISSAN	NJ 505	48*65*9 R	NISSAN	NJ 697	33*66*13 W
NISSAN	NJ 506	55*75*12	NISSAN	NJ 698	42*65*11
NISSAN	NJ 507	85*125*14	NISSAN	NJ 718	51*62*7
NISSAN	NJ 508	42*72.5*12 R	NISSAN	NJ 750	54*75.5/80*18+NYLON
NISSAN	NJ 510	60*82*7	NISSAN	NJ 755	127*146*10
NISSAN	NJ 511	100*114*12	NISSAN	NJ 756	50*70*12.5/17.5
NISSAN	NJ 512	80*105*13	NISSAN	NJ 765	40*52*7 R
NISSAN	NJ 513	38*47*10	NISSAN	NJ 828	68*82*7
NISSAN	NJ 545	57*73*7	NISSAN	NJ 829	86*100*10 L
NISSAN	NJ 550	65*88*11.5	NISSAN	NJ 830	25*35*7
NISSAN	NJ 552	52*67*7/8.5	NISSAN	NJ 831	58*80*10 R
NISSAN	NJ 553	38*50.3*10	NISSAN	NJ 832	20*35*8
NISSAN	NJ 554	78.4*95*8	NISSAN	NJ 836	50*72/83*16.2
NISSAN	NJ 555	74*95*7	NISSAN	NJ 837	57*79*10.5/16
NISSAN	NJ 575	35*67*12/18	NISSAN	NJ 841	140*170*14
NISSAN	NJ 600	28*40*8	NISSAN	NJ 843	35*55*11
NISSAN	NJ 601	95*135*13	NISSAN	NJ 844	43*54*6
NISSAN	NJ 602	58*75*9	NISSAN	NJ 845	40*49*10.3
NISSAN	NJ 603	55*70*9	NISSAN	NJ 879	65*88*11/16.5
NISSAN	NJ 613	85*111*10	NISSAN	NJ 880	65*88*9/18
NISSAN	NJ 621	17*30*7	NISSAN	NJ 880 92–93'	65*88*9/18
NISSAN	NJ 622	15*30*8	NISSAN	NJ 882	46*69.4*11/16
NISSAN	NJ 635	25*40*8	NISSAN	NJ 884	40*52/58.5*10
NISSAN	NJ 637	40*56*8	NISSAN	NJ 885	40*62*9/13
NISSAN	NJ 638	56*72*12.5	NISSAN	NJ 886	65*90*10
NISSAN	NJ 639	52*68*13	NISSAN	NJ 887	39.7*62*11 R
NISSAN	NJ 641	17*31*7	NISSAN	NJ 951	32*50*8 R
NISSAN	NJ 642	32*43*7	NISSAN	NJ 952	28*40*8
NISSAN	NJ 653	17*35*8.5	NISSAN	NJ 953	42*65*9
NISSAN	NJ 658	52*70*9	NISSAN	NJ 955	60*82*12
NISSAN	NJ 684	42*76*12/21	NISSAN	NJ 956	80*135*12/26.5
NISSAN	NJ 685	30*45/77*45 L	NISSAN	NJ 959	28*40*8
NISSAN	NJ 686	105*135*14/20	NISSAN	NK 105	50*65*8
NISSAN	NJ 689	40*65/56*20	NISSAN	NK 106	46*58*7R
NISSAN	NJ 690	36*55*11/16	NISSAN	NK 109	17.5*32*7
NISSAN	NJ 692	56*72*10	NISSAN	R7891	70*95*13 W
NISSAN	NJ 693	60*90*18/22	NISSAN	T1337	54*64*9/24
NISSAN	NJ 694	56*72/77*8/11	MITSUBISHI	03431–06000	60*72*18
NISSAN	NJ 695	57*79*9.5/13.5	MITSUBISHI	03431–06001	60*72*12
NISSAN	NJ 696	52*70*7.5	MITSUBISHI	03434–04020	40*62*12

SOG&H.T Automobile Oil Seal

BRAND	PART NO.	SIZE	BRAND	PART NO.	SIZE
MITSUBISHI	03434-05500	55*67*10	MITSUBISHI	44414-59700	70*92*12
MITSUBISHI	03434-07051	70*92*13.5/20.5	MITSUBISHI	44414-59781	70*92*12
MITSUBISHI	03434-08900	102*116*14	MITSUBISHI	44514-46100	52*65*9
MITSUBISHI	03434-12100	125*150*14	MITSUBISHI	44514-46181	52*65*9
MITSUBISHI	03434-12101	125*150*14	MITSUBISHI	44514-46200	52*65*9
MITSUBISHI	03434-13000	130*150*14	MITSUBISHI	44514-46601	80*105*13
MITSUBISHI	03434-13500	135*165*14	MITSUBISHI	44514-46681	80*105*13
MITSUBISHI	03434-14500	145*175*14	MITSUBISHI	44514-51600	45*60*9
MITSUBISHI	03434-15520	155*190*17	MITSUBISHI	44514-51601	45*60*9
MITSUBISHI	03434-15600	155*180*17	MITSUBISHI	44514-51681	45*60*9
MITSUBISHI	03434-15601	155*180*17	MITSUBISHI	52713-28000	39*52*6
MITSUBISHI	03434-15602	155*180*17	MITSUBISHI	F4008	38*52*6
MITSUBISHI	03437-07000	70*90*10	MITSUBISHI	F4009	41*55*9
MITSUBISHI	03437-07050	70*90*10	MITSUBISHI	F4010	51*65*9
MITSUBISHI	03437-07051	70*90*10	MITSUBISHI	F4011	35*65*12
MITSUBISHI	03437-07052	70*90*10	MITSUBISHI	F4012	45*62*6
MITSUBISHI	03442-13000	65*120.5*10	MITSUBISHI	F4013	42*65*12 R
MITSUBISHI	1052A118	85*103*8 L	MITSUBISHI	F4014	32*48*10 L
MITSUBISHI	1052A809	42*55*7 R	MITSUBISHI	F4016	72*94*12
MITSUBISHI	12020-29600	70*122*12/30.3	MITSUBISHI	F4017	34*50*7 R
MITSUBISHI	12020-39600	70*132*12/30 RHS	MITSUBISHI	F4019	65*120.5*10
MITSUBISHI	21443-21000	72*96*9 L	MITSUBISHI	F4021	102*116*14
MITSUBISHI	21443-21010	72*96*9 L	MITSUBISHI	F4022	55*78*12
MITSUBISHI	22144-21010	35*50*8	MITSUBISHI	F4024	55*72*9
MITSUBISHI	2522A147	30*42*7 R	MITSUBISHI	F4025	130*150*14
MITSUBISHI	31107-06300	85*110*13	MITSUBISHI	F4026	60*103*12/20
MITSUBISHI	31107-06301	85*110*13	MITSUBISHI	F4027	48*80*14
MITSUBISHI	31112-05700	130*160*14 L	MITSUBISHI	F4028	70*112*10/18
MITSUBISHI	31112-05701	130*160*14 L	MITSUBISHI	F4029	68*90*12
MITSUBISHI	31212-33300	135*155.5*15 SIL	MITSUBISHI	F4030	56*81*8
MITSUBISHI	31307-16504	96*113/146*16 L	MITSUBISHI	F4031	74.4*99.5*7.7
MITSUBISHI	31307-16505	96*113/146*16 L	MITSUBISHI	F4044	60*72*12
MITSUBISHI	31311-06101	48*70*12	MITSUBISHI	F4048	40*62*12
MITSUBISHI	31507-06300	95*120*13 S	MITSUBISHI	F4055	70*92*13.5/20
MITSUBISHI	31707-16500	48*65*9	MITSUBISHI	F4058	125*150*14
MITSUBISHI	44214-03400	55*72*9	MITSUBISHI	F4061	155*180*17
MITSUBISHI	44414-16300	48*65*9	MITSUBISHI	F4065	70*90*10
MITSUBISHI	44414-16381	48*65*9	MITSUBISHI	F4081	85*110*13
MITSUBISHI	44414-58100	70*92*12	MITSUBISHI	F4083	96*113/146*16 L
MITSUBISHI	44414-58181	70*92*12	MITSUBISHI	F4084	48*70*12

SOG&H.T Automobile Oil Seal

BRAND	PART NO.	SIZE
MITSUBISHI	F4086	48*65*9
MITSUBISHI	F4088	70*92*12
MITSUBISHI	F4089	45*60*9
MITSUBISHI	F4090	52*84*14 R
MITSUBISHI	F4091	50*65*9 R
MITSUBISHI	F4092	45*58*9
MITSUBISHI	F4093	35*58*10
MITSUBISHI	F4094	50*66.5*13/15.9
MITSUBISHI	F4096	30*45*6
MITSUBISHI	F4097	36*52*10 L
MITSUBISHI	F4099	40*65*10
MITSUBISHI	F4100	52*73*10
MITSUBISHI	F4102	74*100*10
MITSUBISHI	F4104	44*60*7 R
MITSUBISHI	F4105	72*96*9 L
MITSUBISHI	F4107	72*94*10
MITSUBISHI	F4108	58*75*9
MITSUBISHI	F4110	100*125*12.5 L
MITSUBISHI	F4114	80*96*9 L
MITSUBISHI	F4115	105*125*11 L
MITSUBISHI	F4116	75*100*13 L
MITSUBISHI	F4117	52*65*9
MITSUBISHI	F4120	35*56*9/12
MITSUBISHI	F4122	35*50*8 R
MITSUBISHI	F4123	17*28*7 R
MITSUBISHI	F4124	28*40*8
MITSUBISHI	F4127	95*120*13
MITSUBISHI	F4129	32*45*8
MITSUBISHI	F4132	40*58*8
MITSUBISHI	F4133	70*122*12/30.3
MITSUBISHI	F4134	154*172*14
MITSUBISHI	F4136	42*65*12
MITSUBISHI	F4137	58*75*9
MITSUBISHI	F4138	80*105*13
MITSUBISHI	F4142	60*103*10/34 R
MITSUBISHI	F4143	30*46*7 R
MITSUBISHI	F4143	30*46*8 R
MITSUBISHI	F4145	100*120/158*15 L
MITSUBISHI	F4146	57*75*7.5/11.5
MITSUBISHI	F4147	50*65*10

BRAND	PART NO.	SIZE
MITSUBISHI	F4148	37*62*14
MITSUBISHI	F4151	46*102*10/16
MITSUBISHI	F4154	45*53*6.5/8
MITSUBISHI	F4156	130*160*14 L
MITSUBISHI	F4157	80*96*9 L
MITSUBISHI	F4158	50*82*8/11
MITSUBISHI	F4159	52*72*8/11
MITSUBISHI	F4160	39*52*6/11
MITSUBISHI	F4162	25*35*6
MITSUBISHI	F4163	45*72*12/19.5 W
MITSUBISHI	F4166	134*152.4*11
MITSUBISHI	F4167	160*182*17
MITSUBISHI	F4168	70*82*12
MITSUBISHI	F4171	50*68*9 R
MITSUBISHI	F4172	54*82*8/11
MITSUBISHI	F4173	37*62*12.5
MITSUBISHI	F4174	70*92*12 L
MITSUBISHI	F4175	130*146*14
MITSUBISHI	F4176	57*124*14.5/27 W
MITSUBISHI	F4181	100*124/158*15 L
MITSUBISHI	F4182	50*75*9
MITSUBISHI	F4184	37*50*6 R
MITSUBISHI	F4185	91*111*9 L
MITSUBISHI	F4187	57*76*6.8/9.5
MITSUBISHI	F4188	36*64*11/19
MITSUBISHI	F4190	44*60*7 R SIL
MITSUBISHI	F4191	42*60*9 R
MITSUBISHI	F4193	35*58*8.5
MITSUBISHI	F4196	70*100*13 R
MITSUBISHI	F4198	95*125*13.5/21.5
MITSUBISHI	F4199	80*105*13 L
MITSUBISHI	F4201	55*78*8
MITSUBISHI	F4202	80*100*13
MITSUBISHI	F4203	35*54*10/17
MITSUBISHI	F4205	20*30*7
MITSUBISHI	F4206	85*103*8 L
MITSUBISHI	F4207 2005版	85*103*8 L
MITSUBISHI	F4211	45*68.2*15
MITSUBISHI	F4212	45*68.2*6.8/8.3
MITSUBISHI	F4214	39.6*52*10/11 R

SOG&H.T Automobile Oil Seal

BRAND	PART NO.	SIZE
MITSUBISHI	F4221	41*61*9/13.5 W
MITSUBISHI	F4223	35*50*8 R
MITSUBISHI	F4232	56*99*10/34 W
MITSUBISHI	F4233	65*113*10/30 R
MITSUBISHI	F4235	34*46*7 R
MITSUBISHI	F4240	50*74*11 R
MITSUBISHI	F4245	90.5*114*12 L
MITSUBISHI	F4247	56*76*6/12
MITSUBISHI	F4251	30*42*7 R
MITSUBISHI	F4254	42.8*55*10/11
MITSUBISHI	F4263	42*55*7 R
MITSUBISHI	F6301	22*32*5
MITSUBISHI	F6302	28*45*10
MITSUBISHI	F6303	28*47*8
MITSUBISHI	F6304	42*53*8
MITSUBISHI	F6318	70*87*8.5 L
MITSUBISHI	MA 103220	35*65*12
MITSUBISHI	MA 125844	38*52*6
MITSUBISHI	MA 125949	41*55*9
MITSUBISHI	MA 125991	51*65*9
MITSUBISHI	MA 181498	51*65*9
MITSUBISHI	MB 001115	41*55*9
MITSUBISHI	MB 001170	35*65*12
MITSUBISHI	MB 001314	45*58*9
MITSUBISHI	MB 002074	45*62*6
MITSUBISHI	MB 005157	52*84*14 R
MITSUBISHI	MB 025291	52*73*10
MITSUBISHI	MB 025295	72*94*10
MITSUBISHI	MB 031837	30*46*7 R
MITSUBISHI	MB 073187	28*47*8
MITSUBISHI	MB 076184	85*103*8 L
MITSUBISHI	MB 080085	22*42*7
MITSUBISHI	MB 092145	42*65*12 R
MITSUBISHI	MB 092186	40*65*10
MITSUBISHI	MB 092288	37*62*14
MITSUBISHI	MB 092296	42*65*12 R
MITSUBISHI	MB 092437	50*65*10
MITSUBISHI	MB 092527	35*58*10
MITSUBISHI	MB 092620	35*55*11
MITSUBISHI	MB 092712	58*75*9

BRAND	PART NO.	SIZE
MITSUBISHI	MB 109050	50*66.5*13/15.9
MITSUBISHI	MB 109057	50*66.5*13/15.9
MITSUBISHI	MB 125844	38*52*6
MITSUBISHI	MB 160578	42*65*12
MITSUBISHI	MB 160674	57*75*7.5/11.5
MITSUBISHI	MB 160850	56*76*6/12
MITSUBISHI	MB 160852	57*75*7.5/11.5
MITSUBISHI	MB 160946	62*78*7/9.5
MITSUBISHI	MB 160949	45*72*12/20.5 W
MITSUBISHI	MB 161122	74*100*10
MITSUBISHI	MB 161134	74.4*99.5*7.7
MITSUBISHI	MB 161152	70*112*10/18.5
MITSUBISHI	MB 161153	74*100*10
MITSUBISHI	MB 162864	22*35*8
MITSUBISHI	MB 176746	50*66.5*13/15.9
MITSUBISHI	MB 242821	39*52*6
MITSUBISHI	MB 242822	39*52*6/11.5
MITSUBISHI	MB 290013	32*65*12
MITSUBISHI	MB 290311	28*47*8
MITSUBISHI	MB 290739	57*75*7.5/11.5
MITSUBISHI	MB 297514	57*75*7.5/11.5
MITSUBISHI	MB 303867	50*82*8/11
MITSUBISHI	MB 303875	52*72*8/11
MITSUBISHI	MB 308933	46*102*10/16
MITSUBISHI	MB 308965	85*127*13
MITSUBISHI	MB 308966	56*114*10
MITSUBISHI	MB 393719	45*58*9
MITSUBISHI	MB 393807	36*64*11/19
MITSUBISHI	MB 393883	34.7*65*12
MITSUBISHI	MB 393929	35*65*12
MITSUBISHI	MB 526395	57*75*7.5/11.5
MITSUBISHI	MB 573309	54*82*8/11
MITSUBISHI	MB 584601	39*52*6/11
MITSUBISHI	MB 584745	45*62*6
MITSUBISHI	MB 620515	48*74*10
MITSUBISHI	MB 633432	60*86*7/12.5
MITSUBISHI	MB 633434	57*76*6.8/9.5
MITSUBISHI	MB 633944	50*66.5*13/15.9
MITSUBISHI	MB 664439	37*62*12.5
MITSUBISHI	MB 664588	35*58*8.5

SOG&H.T Automobile Oil Seal

BRAND	PART NO.	SIZE
MITSUBISHI	MB 664612	50*75*9
MITSUBISHI	MB 808443	54*76*8/11.5
MITSUBISHI	MB 808444	52*66*8/10.5
MITSUBISHI	MB 837719	37*62*12.5
MITSUBISHI	MB 919210	42.8*55*10/11
MITSUBISHI	MC 082475	42*54*8/10
MITSUBISHI	MC 807438	154*172*14
MITSUBISHI	MC 808763	45*53*6.5/8
MITSUBISHI	MC 827472	60*103*10/34 R
MITSUBISHI	MC 833624	80*100*13
MITSUBISHI	MD 000248	72*96*9 L
MITSUBISHI	MD 000254	44*65*11 R
MITSUBISHI	MD 001170	35*65*12
MITSUBISHI	MD 008762	35*50*8
MITSUBISHI	MD 008762 2005版	35*50*8 R
MITSUBISHI	MD 008882	44*60*7 R
MITSUBISHI	MD 008883	28*40*8
MITSUBISHI	MD 008885	72*96*9 L
MITSUBISHI	MD 009038	17*28*7
MITSUBISHI	MD 010324	70*96*11
MITSUBISHI	MD 010353	70*96*11
MITSUBISHI	MD 016310	35*50*8
MITSUBISHI	MD 016549	72*96*9 L
MITSUBISHI	MD 020240	80*96*9 L
MITSUBISHI	MD 020308	48*68*11 R
MITSUBISHI	MD 020435	80*96*9 L
MITSUBISHI	MD 024529	23*34*8 L
MITSUBISHI	MD 030782	30*46*8
MITSUBISHI	MD 030782 2005版	30*46*7 R
MITSUBISHI	MD 031837	30*46*8
MITSUBISHI	MD 041012	25*35*6
MITSUBISHI	MD 050604	80*96*9 L
MITSUBISHI	MD 050605	17*28*7
MITSUBISHI	MD 050606	44*60*7 R
MITSUBISHI	MD 050608	25*35*6
MITSUBISHI	MD 069947	80*96*9 L
MITSUBISHI	MD 069948	17*28*7
MITSUBISHI	MD 069949	44*60*7 R
MITSUBISHI	MD 069950	25*35*6
MITSUBISHI	MD 088855	37.5*50*6 R

BRAND	PART NO.	SIZE
MITSUBISHI	MD 095355	20*30*7
MITSUBISHI	MD 096246	20*30*7
MITSUBISHI	MD 096264	19*30*7 R
MITSUBISHI	MD 101915	91*111*9 L
MITSUBISHI	MD 112895	60*75*8
MITSUBISHI	MD 117643	72*96*9 L
MITSUBISHI	MD 120699	91*111*9 L
MITSUBISHI	MD 133317	35*50*8 R
MITSUBISHI	MD 150161	85*103*8 L
MITSUBISHI	MD 151463	28*40*8
MITSUBISHI	MD 153103	35*50*8 R
MITSUBISHI	MD 153104	30*45*6
MITSUBISHI	MD 162076	23.5*43*16
MITSUBISHI	MD 168055	37.5*50*6 R
MITSUBISHI	MD 168055 2005版	37*50*6 R
MITSUBISHI	MD 168057	19*30*7
MITSUBISHI	MD 168061	44*60*7 R
MITSUBISHI	MD 174462	44*60*7 R SIL
MITSUBISHI	MD 174940	85*103*8 L
MITSUBISHI	MD 198128	23.5*43*16
MITSUBISHI	MD 329374	70*87*8.5 L
MITSUBISHI	MD 339118	24*41*18
MITSUBISHI	MD 341236	85*103*8 L
MITSUBISHI	MD 343564	80*96*9 L
MITSUBISHI	MD 359158	85*103*8 L
MITSUBISHI	MD 372248	30*46*7 R
MITSUBISHI	MD 372536	35*50*8 R
MITSUBISHI	MD 372536	35*50*8
MITSUBISHI	MD 377999	34*46*6 R
MITSUBISHI	MD 377999	34*46*7 R
MITSUBISHI	MD 701430 88-89'	32*48*10 L
MITSUBISHI	MD 701430 92-93'	32*48*10 L
MITSUBISHI	MD 701732	32*48*10 L
MITSUBISHI	MD 701735	25*35*6
MITSUBISHI	MD 701782	32*48*10 L
MITSUBISHI	MD 703735	30*45*6
MITSUBISHI	MD 703743	36*52*10 L
MITSUBISHI	MD 704164	45*68.2*15
MITSUBISHI	MD 706433	35*56*9/12
MITSUBISHI	MD 707184	35*56*9/12

SOG&H.T Automobile Oil Seal

BRAND	PART NO.	SIZE
MITSUBISHI	MD 707575	42*60*9 R
MITSUBISHI	MD 711769	45*68.2*6.8/8.3
MITSUBISHI	MD 712012	36*52*10
MITSUBISHI	MD 719710	35*54*10/17
MITSUBISHI	MD 723202	30*45*6
MITSUBISHI	MD 731708	39.6*52*10/11 R
MITSUBISHI	MD 755552	41*61*9/13.5 W
MITSUBISHI	MD 755904	41*61*9/13.5 W
MITSUBISHI	MD 901725	22*32*5
MITSUBISHI	MD 901726	22*32*5
MITSUBISHI	ME 001032	96*113/146*16 L
MITSUBISHI	ME 001190	90*113/146*16 L
MITSUBISHI	ME 001195	90*113/146*16 L
MITSUBISHI	ME 001196	96*113/146*16 L
MITSUBISHI	ME 001509	48*70*8
MITSUBISHI	ME 011731	100*120/158*15 L
MITSUBISHI	ME 011732	100*120/158*15 L
MITSUBISHI	ME 011754	100*120/158*15 L
MITSUBISHI	ME 011867	100*124/158*15 L
MITSUBISHI	ME 013306	55*78*8
MITSUBISHI	ME 013384	55*78*8
MITSUBISHI	ME 017208	57*78*10/16.5
MITSUBISHI	ME 023152	100*125*12.5 L
MITSUBISHI	ME 023491	105*125*11 L
MITSUBISHI	ME 024156	55*78*12
MITSUBISHI	ME 030856	108*180*17.5
MITSUBISHI	ME 030856	108*180*17.5
MITSUBISHI	ME 031051	72*94*12
MITSUBISHI	ME 031543	72*94*12
MITSUBISHI	ME 031548	100*125*12.5 L
MITSUBISHI	ME 031584	105*125*11 L
MITSUBISHI	ME 034047	130*150*14
MITSUBISHI	ME 060124	95*125*13.5/21.5
MITSUBISHI	ME 060124	95*125*13.5/21.5
MITSUBISHI	ME 061853	95*120*13 S
MITSUBISHI	ME 071269	76*94*12
MITSUBISHI	ME 202850	50*74*11 R
MITSUBISHI	ME 203250	90.5*114*12 L
MITSUBISHI	ME 605493	23*33*5
MITSUBISHI	ME 620713	34*50*7 R

BRAND	PART NO.	SIZE
MITSUBISHI	ME 622400	34*50*7 R
MITSUBISHI	ME 623281	40*58*8
MITSUBISHI	ME 624211	40*58*8
MITSUBISHI	ME 624694	58*75*9
MITSUBISHI	MF 502488	58*75*9
MITSUBISHI	MH 031051	72*94*12
MITSUBISHI	MH 034000	60*85*10
MITSUBISHI	MH 034006	65*120.5*10
MITSUBISHI	MH 034012	102*116*14
MITSUBISHI	MH 034027	55*78*12
MITSUBISHI	MH 034036	55*72*9
MITSUBISHI	MH 034047	130*150*14
MITSUBISHI	MH 034048	60*103*12/20
MITSUBISHI	MH 034052	45*60*9
MITSUBISHI	MH 034058	60*103*10/34 R
MITSUBISHI	MH 034060	75*100*13
MITSUBISHI	MH 034062	48*65*9
MITSUBISHI	MH 034065	70*100*13
MITSUBISHI	MH 034066	60*85*12
MITSUBISHI	MH 034067	32*45*8
MITSUBISHI	MH 034071	48*65*9
MITSUBISHI	MH 034078	65*120.5*10
MITSUBISHI	MH 034079	60*72*12
MITSUBISHI	MH 034081	155*180*17
MITSUBISHI	MH 034082	155*180*17
MITSUBISHI	MH 034083	65*120.5*10
MITSUBISHI	MH 034084	160*182*17
MITSUBISHI	MH 034085	102*116*14
MITSUBISHI	MH 034086	125*150*14
MITSUBISHI	MH 034087	130*150*14
MITSUBISHI	MH 034089	134*152.4*11
MITSUBISHI	MH 034091	102*116*14
MITSUBISHI	MH 034092	130*150*14
MITSUBISHI	MH 034105	56*99*10/34 W
MITSUBISHI	MH 034106	50*68*9 R
MITSUBISHI	MH 034110	45*53*6.5/8
MITSUBISHI	MH 034112	52*65*9
MITSUBISHI	MH 034120	80*105*13 L
MITSUBISHI	MH 034133	70*82*12
MITSUBISHI	MH 034134	60*72*12

SOG&H.T Automobile Oil Seal

BRAND	PART NO.	SIZE	BRAND	PART NO.	SIZE
MITSUBISHI	MH 034138	70*92*12 L	MITSUBISHI	NJ 024	35*65*12
MITSUBISHI	MH 034139	75*100*13 L	MITSUBISHI	NJ 026	25*35*6
MITSUBISHI	MH 034143	70*122*12/30.3	MITSUBISHI	NJ 027	32*48*10 L
MITSUBISHI	MH 034147	40*58*8	MITSUBISHI	NJ 057	48*68*11 R
MITSUBISHI	MH 034148	58*75*9	MITSUBISHI	NJ 058	80*96*9 L
MITSUBISHI	MH 034151	52*65*9	MITSUBISHI	NJ 068	51*65*9
MITSUBISHI	MH 034153	70*92*12 L	MITSUBISHI	NJ 088	38*52*6
MITSUBISHI	MH 034155	75*100*13 L	MITSUBISHI	NJ 180	39*52*6
MITSUBISHI	MH 034157	80*105*13 L	MITSUBISHI	NJ 242	35*50*8
MITSUBISHI	MH 034172	65*113*10/30 R	MITSUBISHI	NJ 251	80*96*9 L
MITSUBISHI	MH 034175	130*146*14	MITSUBISHI	NJ 252	30*46*8
MITSUBISHI	MH 034178	70*122*12/30.3	MITSUBISHI	NJ 255	17*28*7
MITSUBISHI	MH 034193	57*124*14.5/27 W	MITSUBISHI	NJ 257	105*125*11 L
MITSUBISHI	MH 034205	56*99*10/34 W	MITSUBISHI	NJ 258	55*78*12
MITSUBISHI	MH 034209	57*124*14.5/27 W	MITSUBISHI	NJ 373	28*40*8 R
MITSUBISHI	MH 034213	52*84*14 R	MITSUBISHI	NJ 374	70*100*13 R
MITSUBISHI	MN 110724	37*62*12.5	MITSUBISHI	NJ 396	34*50*7 R
MITSUBISHI	MN 128731	91*107*8 L SIL	MITSUBISHI	NJ 397	70*112*10/18
MITSUBISHI	MN 158385	26*43*10	MITSUBISHI	NJ 398	74.4*99.5*7.7
MITSUBISHI	MR 145502 KIT	45*68.2*15	MITSUBISHI	NJ 399	30*45*8 R
MITSUBISHI	MR 145792	45*68.2*6.8/8.3	MITSUBISHI	NJ 411	100*120/158*15 L
MITSUBISHI	MR 350883	55*80*11/19 W7	MITSUBISHI	NJ 429	50*65*9
MITSUBISHI	MR 580530	45*72*12/19.5 W	MITSUBISHI	NJ 430	60*72*12
MITSUBISHI	MT 100113	48*80*14	MITSUBISHI	NJ 431	45*60*9
MITSUBISHI	MT 100138	70*112*10/18.5	MITSUBISHI	NJ 489	155*180*17
MITSUBISHI	MT 119305	68*90*12	MITSUBISHI	NJ 490	85*110*13
MITSUBISHI	MT 131243	42*53*8	MITSUBISHI	NJ 492	45*58*9
MITSUBISHI	MT 141132	50*65*9	MITSUBISHI	NJ 493	45*62*6
MITSUBISHI	MT 141565	72.75*1.78 min qty.	MITSUBISHI	NJ 494	35*58*10
MITSUBISHI	MT 206979	28*47*8	MITSUBISHI	NJ 495	32*48*10 L
MITSUBISHI	MT 321319	48*80*14	MITSUBISHI	NJ 496	72*94*12
MITSUBISHI	MT 327029	56*81*8	MITSUBISHI	NJ 497	100*125*12.5 L
MITSUBISHI	MT 420207	74.4*99.5*7.7	MITSUBISHI	NJ 498	65*120.5*10
MITSUBISHI	MV 037781	28*45*10	MITSUBISHI	NJ 499	102*116*14
MITSUBISHI	NJ 005	44*60*7 R	MITSUBISHI	NJ 538	50*66.5*13/15.9
MITSUBISHI	NJ 006	72*96*9 L	MITSUBISHI	NJ 539	50*65*10
MITSUBISHI	NJ 007	44*65*11	MITSUBISHI	NJ 540	37*62*14
MITSUBISHI	NJ 008	72*96*9 L	MITSUBISHI	NJ 543	130*150*14
MITSUBISHI	NJ 020	70*96*11	MITSUBISHI	NJ 544	56*81*8
MITSUBISHI	NJ 023	41*55*9	MITSUBISHI	NJ 594	96*113/146*16 L

SOG&H.T Automobile Oil Seal

BRAND	PART NO.	SIZE	BRAND	PART NO.	SIZE
MITSUBISHI	NJ 595	48*65*9	MAZDA	0223-27-018	40*64*12
MITSUBISHI	NJ 610	25*35*6 R	MAZDA	0249-27-018	32*54/70*10.5
MITSUBISHI	NJ 610	25*35*6	MAZDA	0249-27-018A	32*54/70*10.5
MITSUBISHI	NJ 611	30*45*6	MAZDA	0370-11-399	70*88*12 L
MITSUBISHI	NJ 612	36*52*10 L	MAZDA	0376-17-335	35*48/55*13/15
MITSUBISHI	NJ 618	145*175*14	MAZDA	0398-33-065	40*54*5.5
MITSUBISHI	NJ 634	40*58*8	MAZDA	0419-16-213	22*38*8 R
MITSUBISHI	NJ 716	72*94*10	MAZDA	0437-17-335	35*48/55*13/15
MITSUBISHI	NJ 717	154*172*14	MAZDA	0437-17-335A	35*48/55*13/15
MITSUBISHI	NJ 738	52*84*14 R	MAZDA	0453-11-399	80*105*13 L
MITSUBISHI	NJ 739	45*72*12/19.5 W	MAZDA	0527-27-018	45*75*12
MITSUBISHI	NJ 748	39*52*6	MAZDA	0552-10-381	63.5*85*7/8.5 L
MITSUBISHI	NJ 749	35*56*9/12	MAZDA	0557-26-154	75*121*13/33
MITSUBISHI	NJ 754	155*190*17	MAZDA	0559-33-065	70*88*12
MITSUBISHI	NJ 822	40*65*10	MAZDA	0600-26-154	75*121*13
MITSUBISHI	NJ 823	42*65*12 R	MAZDA	0603-16-103	27*43*9 L
MITSUBISHI	NJ 824	50*82*8/11	MAZDA	0603-26-154	35*55*8
MITSUBISHI	NJ 825	52*72*8/11	MAZDA	0603-26-157	48*70*9
MITSUBISHI	NJ 827	48*80*14	MAZDA	0603-33-065	45*65*5
MITSUBISHI	NJ 873	91*111*9 L	MAZDA	0604-26-154	58*80*9
MITSUBISHI	NJ 874	37.5*50*6 R	MAZDA	0604-26-184	42*65*9
MITSUBISHI	NJ 947	58*75*9	MAZDA	0604-27-018	40*75*12
MITSUBISHI	NJ 949	57*75*7.5/11.5	MAZDA	0613-16-103	24*40*8
MITSUBISHI	NJ 950	125*150*14	MAZDA	0636-10-602	51*70*11 R
MITSUBISHI	NJ 979	130*160*14 L	MAZDA	0710-17-417	30*45*9
MITSUBISHI	NJ 981	60*85*12	MAZDA	0727-16-213	33*50*10
MITSUBISHI	NK 038	46*102*10/16	MAZDA	0727-17-335	50*72*12
MITSUBISHI	NK 057	52*73*10	MAZDA	0820-10-605	42*60*9 R
MITSUBISHI	NK 093	60*103*10/34 R	MAZDA	1011-26-154	47*62*9
MITSUBISHI	NK 143	85*103*8 L	MAZDA	1304-11-399	132*158.8*12.4
MAZDA	0111-26-154	34*47*7	MAZDA	1358-27-018	40*75*12
MAZDA	0155-10-602	50*72*12	MAZDA	1363-11-399	102*125*13 L
MAZDA	0155-16-103	30*44*9 R	MAZDA	1363-17-335	40*62*11
MAZDA	0187-10-507A	40*55*8 R	MAZDA	1391-26-157	29*36*8
MAZDA	0187-10-507B	40*55*8 R	MAZDA	1416-26-157	38*45*8
MAZDA	0187-26-154	42*55*9	MAZDA	1668-10-556	68*95*13 L
MAZDA	0187-33-065	40*54*5.5	MAZDA	19035162B	35*56*9/15
MAZDA	0187-33-065A	40*54*5.5	MAZDA	3900-33-065	45*65*5
MAZDA	0221-10-602A	48*70*12 R	MAZDA	4869-10-602	51*70*11 R
MAZDA	0221-10-602B	48*70*12 R	MAZDA	5005-27-165	40*64*12/17.5

SOG&H.T Automobile Oil Seal

BRAND	PART NO.	SIZE	BRAND	PART NO.	SIZE
MAZDA	8599-17-335	35*48*10	MAZDA	FS06-10-602	42.5*54.5*6 R
MAZDA	8-97049-145-0	50*68*9 R	MAZDA	G001-25-742A	43*56*7/9
MAZDA	9958-54-8629	48*62*9 R	MAZDA	G001-25-744A	38*62*7/8
MAZDA	9958-54-8659	48*65*9	MAZDA	G030-26-154A	39*50.5*7
MAZDA	9958-55-2709	52*70*9	MAZDA	G304-33-065	56*68*5/11
MAZDA	9958-55-5729	55*72*9	MAZDA	G601-11-399	90*110*9 L
MAZDA	9958-55-5782	55*78*12	MAZDA	G717-26-154	47*64*7
MAZDA	9958-56-5903	65*90*13	MAZDA	GJ21-26-154	42*58*7
MAZDA	9958-57-5055	75*105*15	MAZDA	GJ21-33-065	56*68/74*5/10
MAZDA	9958-64-0621	40*62*11	MAZDA	H001-33-065	52*63*8
MAZDA	9S9V-35-0005	50*65*7/10	MAZDA	H501-17-103	27*43*7
MAZDA	B001-26-154	40*54*7	MAZDA	JE15-10-602A	43*55*6 R
MAZDA	B001-27-238	35*56*9/15	MAZDA	JF01-10-602A	46*60*7 R
MAZDA	B001-33-065	52*68*7/13	MAZDA	JF01-11-312	75*93*9 L
MAZDA	B001-33-067	50*63*6	MAZDA	KL01-11-312	75*93*9 L
MAZDA	B092-33-060	51*63*9/6	MAZDA	KY01-11-312	83*100*9 L
MAZDA	B092-33-067	51*63*9/6	MAZDA	L3G6-10-602	37*50*6 R
MAZDA	B210-33-065	52*68*8/14	MAZDA	M005-27-165	40*64*12/17.5
MAZDA	B210-33-067	51*63*9/12	MAZDA	M053-27-165	40*64/73*10/16
MAZDA	B216-26-154	48*65*8	MAZDA	M053-27-622A	40*62.5*11
MAZDA	B312-32-180	17*34/45*13/19	MAZDA	M054-27-165	40*64*16
MAZDA	B3C7-10-602	36.5*50.5*7 R	MAZDA	M0A1-27-238	35*56*9/15
MAZDA	B457-32-180	19*30*5/7	MAZDA	M0A2-27-238	35*56*9/15
MAZDA	B630-10-602	30*44*7 R	MAZDA	M4504	48*70*12 R
MAZDA	B630-11-312	83*100*9 L	MAZDA	M4506	40*64/78*12
MAZDA	DJ01-27-238A	34*63*9/15 L	MAZDA	M4510	80*105*13 L
MAZDA	F001-27-238	35*56*9/15	MAZDA	M4511	45*75*12 R
MAZDA	F003-27-238	35*56*9/15	MAZDA	M4513	70*88*12
MAZDA	F004-27-238	35*56*9/15	MAZDA	M4514	75*121*13
MAZDA	F285-11-399A	90*110*9/10 L	MAZDA	M4515	27*43*9 R
MAZDA	F801-10-602	34*48*7 R	MAZDA	M4516	58*80*9
MAZDA	F801-11-399	90*110*9 L	MAZDA	M4517	40*75*12
MAZDA	F802-11-399	90*110*9 L	MAZDA	M4519	47*62*9
MAZDA	FA54-33-065	40*54*5.5	MAZDA	M4520	29*36*8
MAZDA	FB01-33-065A	52*63*8	MAZDA	M4521	40*55*8 R
MAZDA	FE01-10-602	34*48*7 R	MAZDA	M4522	42*55*9
MAZDA	FE5H-11-399A	90*110*9 L	MAZDA	M4523	40*62*11
MAZDA	FS01-10-602	42.5*54.5*6 R	MAZDA	M4525	48*62*9 R
MAZDA	FS01-11-399	90*109*9/10.5 L	MAZDA	M4526	55*78*12
MAZDA	FS02-10-602	42.5*54.5*6 R	MAZDA	M4528	75*105*15

SOG&H.T Automobile Oil Seal

BRAND	PART NO.	SIZE	BRAND	PART NO.	SIZE
MAZDA	M4529	48*65*9	MAZDA	M4629	50*75*12/17
MAZDA	M4535	65*100*12	MAZDA	M4631	36.5*50.5*7 R
MAZDA	M4536	75*121*13	MAZDA	M4632	83*100*9 L
MAZDA	M4537	38*45*8	MAZDA	M4633	40*64*16
MAZDA	M4538	49*56*9	MAZDA	M4634	40*75/89*11/15.5
MAZDA	M4540	52*68*7/13	MAZDA	M4637	45*68*9
MAZDA	M4541	43*50*9	MAZDA	M4640	105*125*13 L
MAZDA	M4542	35*56*9/15	MAZDA	M4641	60*79*11 R
MAZDA	M4543	42*65*12	MAZDA	M4642	42.5*54.5*6 R
MAZDA	M4544	50*75*12/17	MAZDA	M4643	34*48*7 R
MAZDA	M4545	35*48/55*13/15	MAZDA	M4644	30*44*7 R
MAZDA	M4546	70*88*12 L	MAZDA	M4645	75*93*9 L
MAZDA	M4547	52*63*8	MAZDA	M4646	42.5*54.5*6 R
MAZDA	M4548	40*64*12/17.5	MAZDA	M4647	35*56/63.5*8/16.5
MAZDA	M4549	35*55*8	MAZDA	M4649	35*56*9/15
MAZDA	M4550	48*70*9	MAZDA	M4653	44*68*9
MAZDA	M4552	42*65*9	MAZDA	M4655	53*69.85*11 R
MAZDA	M4553	30*44*9	MAZDA	M4656	60*76*7 L
MAZDA	M4556	24*40*8	MAZDA	M4657	43*55*6 R
MAZDA	M4560	50*72*12	MAZDA	M4666	34*63*9/15 L
MAZDA	M4562	38*62*7/8	MAZDA	M502-17-335	38*51*13/15
MAZDA	M4563	43*56*7/9	MAZDA	M502-17-335A	38*51*13/15
MAZDA	M4564	39*50.5*7	MAZDA	M6402	22*38*8
MAZDA	M4565	55*72*9	MAZDA	MO74-27-623A	40*64*12/17.5
MAZDA	M4570	34*48*7 R	MAZDA	MOA3-27-165	36*56*10
MAZDA	M4571	90*110*9 L	MAZDA	MOA7-27-238A	35*56/63.5*8/16.5
MAZDA	M4572	51*70*11 R	MAZDA	NB 384	40*55*8 R
MAZDA	M4573	102*125*13 L	MAZDA	NJ 040	80*105*13 L
MAZDA	M4604	51*63*8.5	MAZDA	NJ 041	45*65*5
MAZDA	M4608	55*78*10	MAZDA	NJ 042	48*70*12 R
MAZDA	M4609	48*65*8	MAZDA	NJ 043	40*75*12
MAZDA	M4611	60*75*86/12	MAZDA	NJ 052	42*55*9
MAZDA	M4612	65*82/94*7/13.5	MAZDA	NJ 084	24*40*8
MAZDA	M4616	42*58*7	MAZDA	NJ 089	40*54*5.5
MAZDA	M4618	48*70*10	MAZDA	NJ 090	47*62*9
MAZDA	M4619	30*44*7 R	MAZDA	NJ 091	48*70*9
MAZDA	M4620	52*68*8/14	MAZDA	NJ 092	35*55*8
MAZDA	M4621	51*63*9/12	MAZDA	NJ 099	70*88*12 L
MAZDA	M4624	47*64*7	MAZDA	M4628	35*58*10
MAZDA	M4626	64*90*13	MAZDA	NJ 116	32*54*10

SOG&H.T Automobile Oil Seal

BRAND	PART NO.	SIZE	BRAND	PART NO.	SIZE
MAZDA	NJ 152	35*58*10	MAZDA	NJ 815	51*70*11 R
MAZDA	NJ 263	35*48/55*13/15	MAZDA	NJ 816	102*125*13 L
MAZDA	NJ 264	40*64/78*12	MAZDA	NJ 819	60*79*11 R
MAZDA	NJ 291	50*72*12	MAZDA	NJ 820	65*90*13
MAZDA	NJ 324	34*48*7 R	MAZDA	NJ 876	43*56*7/9
MAZDA	NJ 325	90*110*9 L	MAZDA	NJ 890	55*72*9
MAZDA	NJ 330	102*125*13 L	MAZDA	NJ 892	52*70*9
MAZDA	NJ 367	51*70*11 R	MAZDA	NJ 919	40*54*5.5
MAZDA	NJ 384	48*65*9	MAZDA	NJ 920	52*63*8
MAZDA	NJ 395	65*90*13	MAZDA	NJ 978	46*60*7 R
MAZDA	NJ 402	75*121*13/23	MAZDA	P005-27-165	40*75*12/17
MAZDA	NJ 414	40*62*11	MAZDA	P017-27-165	40*75/89*11/15.5
MAZDA	NJ 426	29*36*8	MAZDA	PA33-27-165	40*75/86*7/17 R
MAZDA	NJ 427	38*45*8	MAZDA	PA33-27-238	38*58*9.5/15 W14
MAZDA	NJ 428	50*63*6	MAZDA	PA33-27-623	42*64*12/17 W14
MAZDA	NJ 448	30*44*7 R	MAZDA	R001-27-165	40*75/89*11/15.5
MAZDA	NJ 452	35*56*9/15	MAZDA	R503-17-335	40*53/72*12/25
MAZDA	NJ 483	75*121*13	MAZDA	R504-17-335	39*60/82*11/13
MAZDA	NJ 484	27*43*9 L	MAZDA	RF01-12-602	30*44*7 R
MAZDA	NJ 486	50*75*12/17	MAZDA	RF03-12-603A	32*46*7 L
MAZDA	NJ 488	42*65*12	MAZDA	S085-26-154	65*90*13
MAZDA	NJ 536	40*54*7	MAZDA	S113-33-067	52*70*9
MAZDA	NJ 537	52*68*7/13	MAZDA	S126-26-154	55*78*10
MAZDA	NJ 562	48*62*9 R	MAZDA	S231-33-067A	60*75*8
MAZDA	NJ 574	45*65*5	MAZDA	S46F-26-154	44*68*9
MAZDA	NJ 588	55*78*12	MAZDA	S483-26-154	64*90*13
MAZDA	NJ 589	75*105*15	MAZDA	SE08-10-602	51*70*11 R
MAZDA	NJ 598	30*44*9 R	MAZDA	SE08-11-399	102*125*13 L
MAZDA	NJ 599	70*88*12	MAZDA	T005-27-238A	35*56/63.5*8/16.5
MAZDA	NJ 628	58*80*9	MAZDA	T005-27-238A	35*56/63.5*8/16.5
MAZDA	NJ 629	42*65*9	MAZDA	TF01-11-399	105*125*13 L
MAZDA	NJ 630	52*70*9	MAZDA	UB40-26-154	35*58*10
MAZDA	NJ 631	39*50.5*7	MAZDA	UB40-26-157	48*70*10
MAZDA	NJ 650	83*100*9 L	MAZDA	UC86-26-154	35*58*10
MAZDA	NJ 662	52*63*8	MAZDA	UC86-33-065A	65*82/94*7/13.5
MAZDA	NJ 721	43*50*9	MAZDA	UC86-33-067	60*75/86*12
MAZDA	NJ 808	51*63*8.5	MAZDA	UH71-26-157	48*70*10
MAZDA	NJ 809	48*65*8	MAZDA	UH74-33-067	60*75/86*12
MAZDA	NJ 813	40*64*12/17.5	MAZDA	UM46-26-154	44*68*9
MAZDA	NJ 814	40*64*16	MAZDA	UM51-33-065	68.6*86*8.6/11.4

SOG&H.T Automobile Oil Seal

BRAND	PART NO.	SIZE	BRAND	PART NO.	SIZE
MAZDA	V101-10-602	60*79*11 R	ISUZU	1-09625-080-0	70*92*12/18 R
MAZDA	VS01-10-602	53*69.85*11 R	ISUZU	1-09625-084-1	55*72*15
MAZDA	W001-26-154	75*105*15	ISUZU	1-09625-085-0	55*72*15
MAZDA	W001-27-165	50*75*12/17	ISUZU	1-09625-105-0	128*148.2*10 L
MAZDA	W001-33-065	65*90*13	ISUZU	1-09625-107-0	120*153*15 R
MAZDA	W025-26-154	75*121*13	ISUZU	1-09625-108-0	120*153*15/18 L
MAZDA	W025-26-157	43*50*9	ISUZU	1-09625-112-0	105*135*14 L
MAZDA	W026-27-165	50*75*12/17	ISUZU	1-09625-119-0	80*127*16/24 R
MAZDA	W029-26-157	49*56*9	ISUZU	1-09625-128-0	70*92*12
MAZDA	W029-33-065	65*100*12	ISUZU	1-09625-129-0	85*128*11/21
MAZDA	W501-17-335	42*65*12	ISUZU	1-09625-135-0	80*105*12
MAZDA	WL01-10-602	60*76*7 L	ISUZU	1-09625-146-0	130*160*13/16
MAZDA	WL51-11-399	90*110*9 L	ISUZU	1-09625-149-0	80*105*12
MAZDA	WL51-12-602	32*46*6 R	ISUZU	1-09625-155-0	40*55*9
MAZDA	WL51-12-603A	32*46*7 L	ISUZU	1-09625-173-0	60*77*12
MAZDA	YF09-10-602	42*53*7 R	ISUZU	1-09625-181-0	48*62*9
MAZDA	Z501-17-335	45*68*9	ISUZU	1-09625-193-0	70*92*12/18 R
KOMATSU	3EB-21-32180	57*125*8/13.6	ISUZU	1-09625-195-0	105*135*14 L
KOMATSU	41822-12460	105*140*10.7/21.5	ISUZU	1-09625-197-0	128*148.2*10 L
KOMATSU	6130-21-4230	105*135*18	ISUZU	1-09625-200-0	120*153*15 R
KIA	0B3C7-10-602B	36.5*50.5*7 R	ISUZU	1-09625-201-0	120*153*15/18 L
KIA	22327-35504	42*8	ISUZU	1-09625-205-0	60*103*12/20
KIA	KK150-33-065	52*68*7/13	ISUZU	1-09625-206-1	60*103*12/20
KIA	KK150-33-067	51*63*8.5	ISUZU	1-09625-226-0	78*163*16
KIA	OK201-11-312	83*100*9 L	ISUZU	1-09625-227-0	74*143*17.5
KIA	OKO11-33-065	65*82*5/8	ISUZU	1-09625-235-0	48*62*9
KIA	OKO81-33-067	60*75/86*5.7/8	ISUZU	1-09625-265-0	117.5*174*15/28
KIA	RF01-12-603A	46*7	ISUZU	1-09625-268-0	65*84*9 R
ISUZU	1-09625-006-0	75*112*10/17.5	ISUZU	1-09625-280-0	120*153*10 R
ISUZU	1-09625-017-0	68*124*11.5/27 R	ISUZU	1-09625-281-0	120*153*10/13 L
ISUZU	1-09625-025-0	120*153*15 R	ISUZU	1-09625-316-0	70*92*10/16 R
ISUZU	1-09625-030-0	80*143*10/37 R	ISUZU	1-09625-317-0	128*148.2*10 L
ISUZU	1-09625-041-0	120*140*10.5	ISUZU	1-09625-319-0	60*82*10
ISUZU	1-09625-043-0	95*132*12/21.5	ISUZU	1-09625-320-0	100*135*10 L
ISUZU	1-09625-044-0	56*122*10.5	ISUZU	1-09625-322-0	86*143*10/38 R
ISUZU	1-09625-046-0	80*105*12	ISUZU	1-09625-323-0	86*127*16/24 R
ISUZU	1-09625-047-0	60*103*12/20	ISUZU	1-09625-327-0	70*92*12
ISUZU	1-09625-048-0	60*103*12/20	ISUZU	1-09625-329-0	120*150*15
ISUZU	1-09625-051-0	120*153*15/18 L	ISUZU	1-09625-331-0	56*122*10.5
ISUZU	1-09625-063-0	68*90*12	ISUZU	1-09625-332-0	74*143*17.5

SOG&H.T Automobile Oil Seal

BRAND	PART NO.	SIZE	BRAND	PART NO.	SIZE
ISUZU	1-09625-336-0	73*97*12 L	ISUZU	5-09625-018-0	27*43*9 L
ISUZU	1-09625-350-0	117.5*174*15/28	ISUZU	5-09625-022-0	42*55*9 R
ISUZU	1-09625-351-0	115*156*15/28	ISUZU	5-09625-028-0	65*84*9 R
ISUZU	1-09625-357-0	40*56*7 R	ISUZU	5-09625-029-0	70*90*10
ISUZU	1-09625-359-0	80*100*12 L	ISUZU	5-09625-030-0	76*102*9.8/18.5
ISUZU	1-09625-363-0	105*135*14 L	ISUZU	5-09625-034-0	17*30*7
ISUZU	1-09625-379-0	74*143*17.5	ISUZU	5-09625-036-0	82*105*13 L
ISUZU	1-09625-384-0	105*135*14 L	ISUZU	5-09625-052-0	100*135*15 L
ISUZU	1-09625-384-8	105*135*14 L	ISUZU	5-09625-053-1	28*47*8
ISUZU	1-09625-400-0	120*153*10/13 L	ISUZU	5-09625-053-2	28*47*8
ISUZU	1-09625-402-0	100*135*14 L	ISUZU	5-09625-054-0	60*82*12
ISUZU	1-09625-404-0	120*153*10 R	ISUZU	5-09625-059-0	40*62*12
ISUZU	1-09625-410-0	80*115*15 L	ISUZU	5-09625-062-1	38*49.2*9
ISUZU	1-09625-432-0	60*103*12/20	ISUZU	5-09625-079-0	50*68*9
ISUZU	1-09625-435-0	120*153*10 R	ISUZU	5-09625-083-0	65*84*9 R
ISUZU	1-09625-438-0	60*82*12 R	ISUZU	5-09625-092-0	39.5*60*10
ISUZU	1-09625-439-1	105*135*15	ISUZU	5-09625-092-0	39.5*60*10
ISUZU	1-09625-441-0	128*148*14 L	ISUZU	5-09625-141-0	100*135*15 L
ISUZU	1-09625-444-0	78*163*16	ISUZU	5-09625-520-0	100*135*15 L
ISUZU	1-09625-449-1	120*152*17	ISUZU	5-19619-001-0	15*30*8
ISUZU	1-09625-453-0	60*77*12	ISUZU	5-42316-010-0	50*70*7/9.5
ISUZU	1-09625-472-0	80*100*12 L	ISUZU	5-86019-333-0	80*100*10 R
ISUZU	1-09625-473-0	80*115*15 L	ISUZU	8-11065-079-0	52*72*10 R
ISUZU	1-09625-474-0	73*97*12 L	ISUZU	8-94101-493-0	49*100*8
ISUZU	1-09625-484-1	60*103*12/20	ISUZU	8-94105-973-1	40*52*6 R
ISUZU	1-09625-497-0	48*62*9	ISUZU	8-94107-568-0	100*135*10 L
ISUZU	1-09625-505-0	60*77*12	ISUZU	8-94108-663-0	50*64*6.5
ISUZU	1-09625-506-0	120*153*10 R	ISUZU	8-94111-750-0	82*105*13 L
ISUZU	1-09625-513-0	65*84*9 R	ISUZU	8-94121-539-0	40*74*10/18.5
ISUZU	1-09625-515-0	68*90*12	ISUZU	8-94124-173-0	32*44*6 R
ISUZU	1-09625-522-0	60*77*12	ISUZU	8-94129-884-0	87*100*8 L
ISUZU	1-09625-568-0	75*112*10/17.5	ISUZU	8-94130-940-0	19*35*8
ISUZU	1-09625-569-0	95*132*12/22	ISUZU	8-94137-233-0	42*64*6
ISUZU	1-09924-561-0	40*55*9	ISUZU	8-94144-614-0	38*52*7/12
ISUZU	1-51389-005-0	155*185*13/16	ISUZU	8-94156-589-0	15*32*7.5
ISUZU	5-09625-002-1	35*65*13	ISUZU	8-94169-621-0	50*70*7/9.5
ISUZU	5-09625-014-0	100*135*15 L	ISUZU	8-94178-277-0	51*72*10 W
ISUZU	5-09625-014-1	100*135*15 L	ISUZU	8-94178-728-0	45*65*12
ISUZU	5-09625-015-0	60*82*12	ISUZU	8-94178-728-0	45*65*10
ISUZU	5-09625-017-0	40*68*11	ISUZU	8-94214-173-0	40*56*7 R

SOG&H.T Automobile Oil Seal

BRAND	PART NO.	SIZE	BRAND	PART NO.	SIZE
ISUZU	8–94214–912–0	40*56*7 R	ISUZU	8–94370–637–0	104*139*13/16
ISUZU	8–94214–913–0	95*118*10 L	ISUZU	8–94373–765–0	60*82*12
ISUZU	8–94215–220–0	30*45*8	ISUZU	8–94379–067–0	28*44*6
ISUZU	8–94216–107–0	38*52*6/14	ISUZU	8–94381–233–0	96*118*11 L
ISUZU	8–94223–026–0	35*49.2*12.5 L	ISUZU	8–94407–711–0	59*75*10
ISUZU	8–94223–026–0	34.5*49.3*12.5 L	ISUZU	8–94408–083–0	58*103*11/19.5 R
ISUZU	8–94223–981–1	15*32*7	ISUZU	8–94408–084–0	45*78*12/25.5
ISUZU	8–94224–173–0	48*62*7/9	ISUZU	8–94408–085–0	45*78*12/25.5
ISUZU	8–94227–048–0	54*70*7/9.5	ISUZU	8–94422–387–0	38*49.2*9
ISUZU	8–94227–475–0	20*31*7	ISUZU	8–94422–388–0	38*49.2*9
ISUZU	8–94235–369–0	95*118*10 L	ISUZU	8–94422–389–0	27*43*7
ISUZU	8–94239–173–0	28*40*8 RM	ISUZU	8–94422–390–0	27*43*7
ISUZU	8–94240–603–0	48*64*14	ISUZU	8–94422–391–0	42*62*8
ISUZU	8–94248–116–1	63*80*7.7	ISUZU	8–94422–392–0	42*62*8
ISUZU	8–94248–117–1	73*90*8	ISUZU	8–94424–353–0	12*28*7.5
ISUZU	8–94249–520–1	28*44*6	ISUZU	8–94433–718–0	50*67*9
ISUZU	8–94249–521–1	28*44*6	ISUZU	8–94441–817–1	48*70*13/19
ISUZU	8–94251–171–0	40*52*6 R	ISUZU	8–94447–855–0	45*65*10
ISUZU	8–94257–318–0	33*55*9.5	ISUZU	8–94450–127–0	45*62*9
ISUZU	8–94258–894–0	46*94.5*8	ISUZU	8–94459–593–0	50*64*6.5
ISUZU	8–94318–909–0	48*70*12	ISUZU	8–94464–555–0	50*60*6
ISUZU	8–94318–910–0	33*55*9.5 W	ISUZU	8–94468–654–0	40*52*6 R
ISUZU	8–94326–441–0	27*43*9 R	ISUZU	8–94475–250–0	42*60*6
ISUZU	8–94327–062–0	30*45*7	ISUZU	8–94482–157–0	40*52*6 R
ISUZU	8–94334–845–0	30*45*7	ISUZU	8–97017–350–0	34*48*8 R
ISUZU	8–94336–314–0	76*102*9.8/18.5	ISUZU	8–97023–373–0	43*55*6 R
ISUZU	8–94336–314–1	76*102*9.8/18.5	ISUZU	8–97045–145–0	50*68*9 R
ISUZU	8–94336–315–0	46*94.4*8	ISUZU	8–97046–701–2	42*62*8
ISUZU	8–94336–316–0	80*113*12/22	ISUZU	8–97046–705–2	38*49.2*8/12 L
ISUZU	8–94336–316–1	80*113*12/22	ISUZU	8–97049–145–0	50*68*9 R
ISUZU	8–94336–317–0	49*100*8	ISUZU	8–97049–146–0	95*118*10 L
ISUZU	8–94336–317–1	49*100*8	ISUZU	8–97049–146–0	95*118*10 L
ISUZU	8–94339–997–0	40*56*7 R	ISUZU	8–97072–823–1	100*135*17
ISUZU	8–94340–317–0	38*49.2*9	ISUZU	8–97074–651–0	45*65*10
ISUZU	8–94367–958–0	80*113*12/22	ISUZU	8–97080–562–0	40*56*7 R
ISUZU	8–94367–959–0	76*102*9.8/18.5	ISUZU	8–97122–937–0	82*121*12/19
ISUZU	8–94367–960–0	49*100*8	ISUZU	8–97136–173–0	24*41*18
ISUZU	8–94367–961–0	46*94.4*8	ISUZU	8–97216–792–0	52*76*11/12
ISUZU	8–94369–516–0	24*40*8	ISUZU	8–97253–550–0	40*54*7
ISUZU	8–94369–518–0	109*137*13/16	ISUZU	8–97257–296–0	45*65*10

SOG&H.T Automobile Oil Seal

BRAND	PART NO.	SIZE	BRAND	PART NO.	SIZE
ISUZU	8–97328–648–0	45*78*11/18.5 W7	ISUZU	9–09924–359–0	27*43*9 L
ISUZU	8–97329–780–0	109*137*13/16	ISUZU	9–09924–374–0	74*142*14
ISUZU	8–97372–154–0	23*41.5*19	ISUZU	9–09924–392–0	78*163*16
ISUZU	8–97602–379–0	104*139*13/16	ISUZU	9–09924–393–0	123*184*15/28
ISUZU	8–97943–951–0	50*68*9 R	ISUZU	9–09924–404–0	60*77*12
ISUZU	8–98134–394–0	52*76*11/21	ISUZU	9–09924–407–0	75*115*13/20.5
ISUZU	8–98202–911–0	46*94.4*8	ISUZU	9–09924–408–0	75*115*13/20.5
ISUZU	8–98202–912–0	49*100*8	ISUZU	9–09924–409–0	75*115*13/20.5
ISUZU	9–09625–415–0	100*145*15/26	ISUZU	9–09924–415–0	100*145*15/26
ISUZU	9–09724–003–0	40*74*10/18.5	ISUZU	9–09924–416–0	100*145*15/26
ISUZU	9–09724–004–0	34.5*49.3*12.5 L	ISUZU	9–09924–417–0	100*145*15/26
ISUZU	9–09724–005–0	45*78*12/25.5	ISUZU	9–09924–418–0	100*145*15/26
ISUZU	9–09724–006–0	45*78*12/25.5	ISUZU	9–09924–433–0	100*135*15 L
ISUZU	9–09724–007–0	45*65*12	ISUZU	9–09924–448–0	50*68*9
ISUZU	9–09724–007–0	45*65*10	ISUZU	9–09924–449–0	82*105*13
ISUZU	9–09724–010–0	58*103*11/19.5 R	ISUZU	9–09924–451–0	30*42*8
ISUZU	9–09724–011–0	58*103*11/19.5 R	ISUZU	9–09924–468–0	64*132.5*13
ISUZU	9–09724–018–0	80*113*12/22	ISUZU	9–09924–470–0	64*132.5*13
ISUZU	9–09724–019–0	49*100*8	ISUZU	9–09924–488–0	128*148.2*10 L
ISUZU	9–09724–022–0	52*72*7.5	ISUZU	9–09924–499–0	64*132.5*13
ISUZU	9–09724–022–1	52*72*7.5	ISUZU	9–09924–500–0	115*156*15/28
ISUZU	9–09724–023–0	65*85*10	ISUZU	9–09924–501–0	60*77*12
ISUZU	9–09724–032–0	40*68*11	ISUZU	9–09924–506–0	70*92*12
ISUZU	9–09724–033–0	27*43*9 L	ISUZU	9–09924–507–0	60*82*12
ISUZU	9–09724–035–0	39.5*60*10	ISUZU	9–09924–550–0	70*92*12
ISUZU	9–09724–035–0	39.5*60*10	ISUZU	9–09924–551–0	60*77*12
ISUZU	9–09724–063–0	33*55*9.5	ISUZU	9–09924–561–0	40*55*9
ISUZU	9–09724–064–0	48*70*9.5	ISUZU	9–09924–562–0	120*140*10.5
ISUZU	9–09924–136–0	75*115*13/20.5	ISUZU	9–09924–580–0	70*92*12
ISUZU	9–09924–149–0	48*62*7/9	ISUZU	9–09926–024–0	50*62*5
ISUZU	9–09924–241–0	77*93*10	ISUZU	94025809	68*124*11.5/27 R
ISUZU	9–09924–242–0	46*94.4*8	ISUZU	I3504	68*124*11.5/27 R
ISUZU	9–09924–261–0	32*48*8	ISUZU	I3505	80*143*10/37 R
ISUZU	9–09924–290–0	100*145*15/26	ISUZU	I3506	80*105*12
ISUZU	9–09924–296–0	50*68*9	ISUZU	I3507	60*103*12/20
ISUZU	9–09924–303–0	50*65*9 R	ISUZU	I3510	55*72*14.8
ISUZU	9–09924–322–0	60*77*12	ISUZU	I3512	45*65*10
ISUZU	9–09924–327–0	70*92*12	ISUZU	I3513	80*113*12/22
ISUZU	9–09924–338–0	68*90*12	ISUZU	I3515	65*85*10
ISUZU	9–09924–356–0	105*135*14 L	ISUZU	I3517	27*43*9 R

SOG&H.T Automobile Oil Seal

BRAND	PART NO.	SIZE	BRAND	PART NO.	SIZE
ISUZU	I3518	50*65*9 R	ISUZU	I3612	95*118*10 L
ISUZU	I3525	40*74*10/18.5	ISUZU	I3613	100*135*10 L
ISUZU	I3528	75*115*13/20.5	ISUZU	I3614	60*82*10
ISUZU	I3539	32*48*8	ISUZU	I3615	40*56*7 R
ISUZU	I3542	100*145*15/26	ISUZU	I3617	38*49.2*9
ISUZU	I3543	50*68*9 R	ISUZU	I3618	40*62*12
ISUZU	I3544	60*77*12	ISUZU	I3619	54*70*7/9.5
ISUZU	I3545	60*82*12	ISUZU	I3620	120*153*15
ISUZU	I3546	70*92*12	ISUZU	I3621	155*185*13/16
ISUZU	I3547	68*90*12	ISUZU	I3623	48*64*14
ISUZU	I3552	105*135*14 L	ISUZU	I3626	70*92*10/16 R
ISUZU	I3555	74*142*14	ISUZU	I3627	80*100*12 L
ISUZU	I3557	78*163*16	ISUZU	I3629	40*74*10/18.5
ISUZU	I3558	123*184*15/28	ISUZU	I3632	59*75*10
ISUZU	I3560	100*135*15 L	ISUZU	I3634	33*55*9.5 W
ISUZU	I3562	82*105*13 L	ISUZU	I3635	51*72*10 W
ISUZU	I3563	30*42*8	ISUZU	I3636	48*70*12
ISUZU	I3565	64*132.5*13	ISUZU	I3638	50*67*9
ISUZU	I3569	70*92*12/18 R	ISUZU	I3640	60*77*12
ISUZU	I3573	75*112*10/17.5	ISUZU	I3642	86*143*10/38 R
ISUZU	I3574	120*140*10.5	ISUZU	I3643	86*127*16/24 R
ISUZU	I3575	95*132*12/22	ISUZU	I3644	65*84*9 R
ISUZU	I3584	40*68*11	ISUZU	I3646	20*31*7
ISUZU	I3585	76*102*9.8/18.5	ISUZU	I3647	28*47*8
ISUZU	I3586	52*72*7.5	ISUZU	I3650	34*48*8 R
ISUZU	I3588	39.5*60*10	ISUZU	I3655	73*97*12 L
ISUZU	I3590	70*90*10	ISUZU	I3660	42*62*8
ISUZU	I3591	78*163*16	ISUZU	I3664	60*82*12 R
ISUZU	I3592	85*128*11/21	ISUZU	I3665	105*135*15
ISUZU	I3593	58*103*11/19.5 R	ISUZU	I3666	120*153*10 R
ISUZU	I3594	56*122*10.5	ISUZU	I3670	65*84*9 R
ISUZU	I3600	117.5*174*15/28	ISUZU	I3672	128*148.2*14 L
ISUZU	I3601	48*62*9	ISUZU	I3673	28*40*8 RM
ISUZU	I3602	48*62/70*7/10	ISUZU	I3674	17*30*7
ISUZU	I3604	35*65*13	ISUZU	I3675	82*121*12/19
ISUZU	I3605	63*80*7.7	ISUZU	I3682	43*55*6 R
ISUZU	I3606	73*90*8	ISUZU	I3685	38*49.2*8/12 L
ISUZU	I3607	46*94.4*8	ISUZU	I3692	109*137*13/16
ISUZU	I3608	49*100*8	ISUZU	I3694	104*139*13/16
ISUZU	I3609	120*153*15/18 L	ISUZU	I3698	40*54*7

SOG&H.T Automobile Oil Seal

BRAND	PART NO.	SIZE	BRAND	PART NO.	SIZE
ISUZU	I3699	45*65*10	ISUZU	NJ 468	95*132*12/22
ISUZU	I3702	19*35*8	ISUZU	NJ 469	60*103*12/20
ISUZU	I3900	38*52*6/14	ISUZU	NJ 470	55*72*14.8
ISUZU	I3901	35*49.2*12.5 L	ISUZU	NJ 471	40*55*9
ISUZU	I3902	52*72*10 R	ISUZU	NJ 472	76*102*9.8/18.5
ISUZU	I3906	50*64*6.5	ISUZU	NJ 473	45*65*12
ISUZU	I3907	42*64*6	ISUZU	NJ 474	52*72*7.5
ISUZU	I3908	38*52*7/12	ISUZU	NJ 475	39.5*60*10
ISUZU	I3909	28*44*6	ISUZU	NJ 476	46*94.4*8
ISUZU	NJ 014	50*68*9	ISUZU	NJ 477	60*77*12
ISUZU	NJ 014	50*68*9 R	ISUZU	NJ 479	64*133*13
ISUZU	NJ 060	82*105*13 L	ISUZU	NJ 480	115*156*15/28
ISUZU	NJ 100	48*70*9.5	ISUZU	NJ 500	68*90*12
ISUZU	NJ 101	33*55*9.5	ISUZU	NJ 531	100*145*15/26
ISUZU	NJ 138	155*185*13/16	ISUZU	NJ 533	123*184*15/28
ISUZU	NJ 144	23.5*40*7.5 R	ISUZU	NJ 535	75*115*13/20.5
ISUZU	NJ 231	60*82*12	ISUZU	NJ 568	56*122*10.5
ISUZU	NJ 232	100*135*15 L	ISUZU	NJ 569	40*74*10/18.5
ISUZU	NJ 233	70*92*12	ISUZU	NJ 570	45*78*12/25.5
ISUZU	NJ 236	70*92*12/18 R	ISUZU	NJ 571	80*113*12/22
ISUZU	NJ 262	128*148.2*10 L	ISUZU	NJ 573	100*145*15/26
ISUZU	NJ 265	82*105*13 L	ISUZU	NJ 585	58*103*11/19.5 R
ISUZU	NJ 266	65*84*9 R	ISUZU	NJ 596	105*135*14 L
ISUZU	NJ 267	42*55*9 R	ISUZU	NJ 597	52*72*10 R
ISUZU	NJ 321	28*47*8	ISUZU	NJ 620	27*43*9 L
ISUZU	NJ 322	95*118*10 L	ISUZU	NJ 625	54*70*7/9.5
ISUZU	NJ 323	40*56*7 R	ISUZU	NJ 626	48*62/70*7/10
ISUZU	NJ 383	49*100*8	ISUZU	NJ 627	77*93*10
ISUZU	NJ 393	85*128*11/21	ISUZU	NJ 646	100*135*10 L
ISUZU	NJ 394	65*85*10	ISUZU	NJ 665	50*64*6.5
ISUZU	NJ 423	40*68*11	ISUZU	NJ 666	42*64*6
ISUZU	NJ 424	70*90*10	ISUZU	NJ 676	35*65*13
ISUZU	NJ 425	100*145*15/26	ISUZU	NJ 678	50*70*7/9.5
ISUZU	NJ 446	87*100*8 L	ISUZU	NJ 679	38*52*6/14
ISUZU	NJ 449	40*52*6 R	ISUZU	NJ 723	128*148.2*10 L
ISUZU	NJ 453	34.5*49.3*12.5 L	ISUZU	NJ 735	48*64*14
ISUZU	NJ 454	30*45*8	ISUZU	NJ 736	63*80*7.7
ISUZU	NJ 465	75*112*10/17.5	ISUZU	NJ 737	73*90*8
ISUZU	NJ 466	68*124*11.5/27 R	ISUZU	NJ 789	40*56*6.5 R
ISUZU	NJ 467	120*140*10.5	ISUZU	NJ 790	120*153*10 R

SOG&H.T Automobile Oil Seal

BRAND	PART NO.	SIZE
ISUZU	NJ 794	38*49.2*9
ISUZU	NJ 799	28*44*6
ISUZU	NJ 802	46*94.4*8
ISUZU	NJ 804	74*142*14
ISUZU	NJ 875	32*44*6 R
ISUZU	NJ 935	80*143*10/37 R
ISUZU	NJ 936	78*163*16
ISUZU	NJ 937	60*82*10
ISUZU	NJ 938	74*143*17.5
ISUZU	NJ 939	117.5*174*15/28
ISUZU	NJ 940	40*62*12
ISUZU	NJ 942	49*100*8
ISUZU	NJ 944	40*74*10/18.5
ISUZU	NJ 974	120*153*15/18 L
ISUZU	NK 009	59*75*10
ISUZU	NK 010	50*67*9
ISUZU	NK 025	70*92*12
ISUZU	NK 026	73*97*12 L
ISUZU	NK 079	65*84*9 R
HYUNDAI	21321-42011	25*35*6 R
HYUNDAI	21321-42031	44*60*7 R
HYUNDAI	21321-42041	80*96*9 L
HYUNDAI	21421-21020	30*46*8
HYUNDAI	21421-22000	34*48*8 R
HYUNDAI	21421-23000	37.6*49*7.5 R
HYUNDAI	21421-26600	34*48*8 R
HYUNDAI	21421-33134	25*35*6 R
HYUNDAI	21421-35011	37*50*6 R
HYUNDAI	21421-35500	37*50*6 R
HYUNDAI	21443-02500	60*75*8 L
HYUNDAI	21443-2A100	91*111*9 L
HYUNDAI	21443-32000	80*96*9 L
HYUNDAI	21443-33005	80*96*9 L
HYUNDAI	21443-35510	91*111*9 L
HYUNDAI	21443-4A001	91*114*9
HYUNDAI	22144-35000	35*50*8 R
HYUNDAI	22144-3B000	35*50*8 R
HYUNDAI	22144-3B001	35*50*8 R
HYUNDAI	22421-33114	44*60*7 R
HYUNDAI	22443-23001	27*44*7.5/10.5

BRAND	PART NO.	SIZE
HYUNDAI	43119-28000	35*56*7.5/11.5 W14
HYUNDAI	43119-28003	35*56*9/12.5 R
HYUNDAI	43119-37010	35*56*10/13.5 W
HYUNDAI	43119-39010	41*61*9/13 R
HYUNDAI	43119-39011	41*61*9/13 R
HYUNDAI	43119-39020	41*61*9/13 R
HYUNDAI	43126-34011	14*26*12.3
HYUNDAI	43134-02000	22*32*6 R
HYUNDAI	43156-44000	36*52*10
HYUNDAI	46131-36002	43*60*9 R
HYUNDAI	51713-11000	38*52*6
HYUNDAI	51713-21100	50*66.5*13/15.9
HYUNDAI	51830-4E000	52*70*10
HYUNDAI	52713-24000	39*54*6
HYUNDAI	52810-45210	80*122*10/18
HYUNDAI	52820-43300	47.6*73*9.5/12
HYUNDAI	52820-45000	46*102*10/16
HYUNDAI	52820-45210	52*112*10.5/15.5
HYUNDAI	52820-4B100	39*76.5*10.5/14
HONDA	12342-P08-004	24*40*7.5/10
HONDA	12342-P2F-A01	24*40*7.5/10
HONDA	51490-KAE-003	41*54*11
HONDA	51490-KR6-305	37*50*11
HONDA	53660-ST0-013	27*38*6.5
HONDA	8-98036-594-0	59*75*10
HONDA	90756-028-000	27*37*7.5
HONDA	91201-KRS-830	30*42*4.5
HONDA	91202-566-003	30*48*8
HONDA	91202-567-003	30*48*8
HONDA	91203-611-000	27*43*9 L
HONDA	91203-611-003	27*43*9 L
HONDA	91203-611-004	27*43*9 L
HONDA	91203-KSP-911	14*22*5
HONDA	91203-PA5-004	27*43*9 L
HONDA	91203-PFB-013	27*43*9 L
HONDA	91203-PG6-003	27*43*9 L
HONDA	91203-PG6-004	27*43*9 L
HONDA	91203-PR4-004	27*43*9 L
HONDA	91205-611-003	35*56*9/12.5 W
HONDA	91205-611-005	35*56*9/12.5 W

SOG&H.T Automobile Oil Seal

BRAND	PART NO.	SIZE	BRAND	PART NO.	SIZE
HONDA	91205-689-003	35*62*9/12	HONDA	91206-PX5-000	40*58*8/11.5 R
HONDA	91205-689-005	35*62*9/12	HONDA	91206-PX5-003	40*58*8/11.5 R
HONDA	91205-PC8-931	38*54*8/12	HONDA	91206-PX5-005	40*58*8/11.5 R
HONDA	91205-PC8-932	38*54*8/12	HONDA	91207-639-015	44*68*8 W
HONDA	91205-PC8-934	38*54*8/12 L	HONDA	91209-612-000	12*22*7
HONDA	91205-PC8-934	38*54*8/12	HONDA	91209-612-003	12*22*7
HONDA	91205-PC8-935	38*54*8/12	HONDA	91212-611-003	35*50*8 L
HONDA	91205-PC9-003	35*62*9/12	HONDA	91212-611-004	35*50*8 L
HONDA	91205-PC9-005	35*62*9/12	HONDA	91212-679-014	30*42*8
HONDA	91205-PE6-003	35*68*9/15.5	HONDA	91212-P01-003	31*46*7 RH
HONDA	91205-PE6-004	35*68*9/15.5	HONDA	91212-PA5-004	35*50*8 L
HONDA	91205-PE6-005	35*68*9/15.5	HONDA	91212-PC6-003	35*54*8
HONDA	91205-PL3-A01	35*56*9/12	HONDA	91212-PD2-004	35*54*8
HONDA	91205-PL3-A02	35*56*9/12	HONDA	91212-PE0-003	31*46*8 L
HONDA	91205-PL8-003	35*68*9/15.5	HONDA	91212-PE1-721	31*46*8 L
HONDA	91205-PL8-005	35*68*9/13.5	HONDA	91212-PH1-003	35*54*8
HONDA	91205-PX5-000	35*56*9/12	HONDA	91212-PH1-003	35*54*8
HONDA	91205-PX5-003	35*56*9/12	HONDA	91212-PH7-013	41*56*8 R
HONDA	91205-PX5-005	35*56*9/12	HONDA	91212-PLC-003	38*50*7 L
HONDA	91206-286-003	14*28*7	HONDA	91212-PLC-004	38*50*7 L
HONDA	91206-611-003	35*68*9/12.5 L	HONDA	91212-PLC-305	38*50*7 L
HONDA	91206-611-005	35*68*9/12.5 L	HONDA	91212-PLM-A01	38*50*7 L
HONDA	91206-689-003	35*76*9/12.5 R	HONDA	91212-PM7-003	31*46*8 L
HONDA	91206-689-005	35*76*9/12.5 R	HONDA	91212-PT0-003	40*52*7 L
HONDA	91206-PC8-003	40*76*9/12.5 R	HONDA	91212-RGA-003	30*42*7 R
HONDA	91206-PC8-005	40*76*9/12.5 R	HONDA	91213-PC6-000	29*45*8 L
HONDA	91206-PE6-003	35*56*9/12	HONDA	91213-PC6-003	29*45*8 L
HONDA	91206-PE6-003 2005版	35*56*8/11.5 L	HONDA	91213-PD2-004	29*45*8 L
HONDA	91206-PE6-004	35*56*9/12	HONDA	91213-PE1-721	29*45*8 L
HONDA	91206-PE6-004 2005版	35*56*8/11.5 L	HONDA	91213-PE1-722	29*45*8 L
HONDA	91206-PE6-005	35*56*9/12	HONDA	91213-PH1-004	29*45*8 L
HONDA	91206-PE9-003	35*56*9/12	HONDA	91213-PH1-013	29*45*8 L
HONDA	91206-PE9-005	35*56*9/12	HONDA	91213-PH7-003	35*50*8 R
HONDA	91206-PK4-003	40*66*8/11.5 R	HONDA	91213-PH7-004	35*50*8 R
HONDA	91206-PL3-A01	35*62*8/11.5 R	HONDA	91213-PH7-013	35*50*8 R
HONDA	91206-PL3-A02	35*62*8/11.5 R	HONDA	91213-PL2-003	35*50*8 R
HONDA	91206-PL6-003	35*56*8/11.5 L	HONDA	91213-PR3-003	29*43*8 L
HONDA	91206-PL6-003	35*56*9/12	HONDA	91213-PR3-004	29*43*8 L
HONDA	91206-PL6-005	35*56*8/11.5 L	HONDA	91213-PT0-003	28*42*8
HONDA	91206-PL6-005	35*56*9/12	HONDA	91213-PT0-004	28*42*8

SOG&H.T Automobile Oil Seal

BRAND	PART NO.	SIZE	BRAND	PART NO.	SIZE
HONDA	91214–634–003	74*98*12 R	HONDA	91216–PC8–005	27*42*7 L
HONDA	91214–634–003	74*98*12	HONDA	91216–PG1–003	28*43*7
HONDA	91214–634–004	74*98*12 R	HONDA	91216–PG1–005	28*43*7
HONDA	91214–634–005	74*98*12 R	HONDA	91216–PH8–003	28*41*7
HONDA	91214–679–014	65*88*12 R	HONDA	91216–PH8–005	28*41*7
HONDA	91214–679–024	65*88*12 R	HONDA	91216–PL3–003	26*42*7 L
HONDA	91214–679–303	65*88*12 R	HONDA	91216–PL3–005	26*42*7
HONDA	91214–P2F–A01	80*100*10 R	HONDA	91216–PL6–003	20*34*7
HONDA	91214–PA5–004	74*98*12 R	HONDA	91216–PL6–005	20*34*7
HONDA	91214–PAA–A01	80*100*10 R	HONDA	91233–PT0–003	27*40*8
HONDA	91214–PB2–003	76*98*12 R	HONDA	91233–PT0–003	27*40*8 L
HONDA	91214–PC6–003	80*100*10 R	HONDA	91250–634–003	45*64*9/14
HONDA	91214–PC6–013	80*100*10 R	HONDA	91250–634–005	45*64*9/14
HONDA	91214–PC7–003	80*100*10 R	HONDA	91250–SB0–013	49*64/71*6/13
HONDA	91214–PD2–004	80*100*10 R	HONDA	91250–SB0–015	49*64/71*6/13
HONDA	91214–PE0–003	31*46*8 L	HONDA	91250–SB0–023	49*64/71*6/13
HONDA	91214–PE1–721	80*100*10 R	HONDA	91250–SB0–025	49*64/71*6/13
HONDA	91214–PE9–004	65*88*12 R	HONDA	91250–SB0–623	47*64/68*6/14
HONDA	91214–PH1–003	80*100*10 R	HONDA	91250–SB0–624	47*64/68*6/14
HONDA	91214–PH1–004	80*100*10 R	HONDA	91250–SB0–625	47*64/68*6/14
HONDA	91214–PH1–013	80*100*10 R	HONDA	91250–SB0–626	47*64/68*6/14
HONDA	91214–PH1–661	80*100*10 R	HONDA	91250–SC2–003	45*58*7
HONDA	91214–PH3–751	80*100*10 R	HONDA	91250–SC2–005	45*58*7
HONDA	91214–PH7–004	80*98*10 L	HONDA	91251–634–003	45*93*5.8/7.8
HONDA	91214–PH7–013	80*98*10 L	HONDA	91251–634–005	45*93*5.8/7.8
HONDA	91214–PL2–003	80*98*10 L	HONDA	91251–692–003	45*72.2*7.5/8.5
HONDA	91214–PLC–003	80*100*10 R	HONDA	91251–692–005	45*72.2*7.5/8.5
HONDA	91214–PLE–003	80*100*10 R	HONDA	91251–692–013	45*72.2*7.5/8.5
HONDA	91214–PNA–014	80*98*10 L	HONDA	91251–692–015	45*72.2*7.5/8.5
HONDA	91214–PR4–A00	80*100*10 R	HONDA	91251–SA5–003	47*72.2*6/8
HONDA	91214–PR4–A01	80*100*10 R	HONDA	91251–SA5–005	47*72.2*6/8
HONDA	91214–PT0–004	80*100*10 R	HONDA	91251–SB0–013	49*72.2*6/8
HONDA	91214–PWA–003	80*98*10 L	HONDA	91251–SB0–015	49*72.2*6/8
HONDA	91216–634–003	22*35*7	HONDA	91252–634–003	42*60*7
HONDA	91216–634–005	22*35*7	HONDA	91252–634–005	42*60*7
HONDA	91216–689–003	25*40*7	HONDA	91252–692–003	42*56.2*7
HONDA	91216–689–005	25*40*7	HONDA	91252–692–005	42*56.2*6
HONDA	91216–PA0–003	22*35*7	HONDA	91252–692–930	42*56.2*9.5
HONDA	91216–PA0–005	22*35*7	HONDA	91252–692–931	42*56.2*9.5
HONDA	91216–PC8–003	27*42*7 L	HONDA	91252–692–932	42*56.2*9.5

SOG&H.T Automobile Oil Seal

BRAND	PART NO.	SIZE	BRAND	PART NO.	SIZE
HONDA	91252–SC2–003	42*55*7	HONDA	A4851	35*56*9/12
HONDA	91252–SC2–005	42*55*7	HONDA	A4852	35*62*9/12
HONDA	91252–SC2–013	42*55*7	HONDA	A4854	40*58*8/11.5 R
HONDA	91252–SC2–015	42*55*7	HONDA	A4855	28*42*8
HONDA	91253–663–003	42*62*7	HONDA	A4857	80*100*10 R
HONDA	91253–663–005	42*62*7	HONDA	A4859	29*43*8 L
HONDA	91253–663–015	42*62*7	HONDA	A4860	44*68*8 W
HONDA	91257–679–003	50*66*8/13	HONDA	A4861	35*76*9/12.5 R
HONDA	91257–679–013	50*66*8/13	HONDA	A4863	31*46*7 RH
HONDA	A4800	45*64/70*9/14	HONDA	A4865	40*66*8/11.5 R
HONDA	A4801	45*93*5.8/7.8	HONDA	A4866	40*52*7 L
HONDA	A4802	42*60*7	HONDA	A4867	27*40*8
HONDA	A4803	35*50*8 L	HONDA	A4867	27*40*8 L
HONDA	A4804	45*72.2*7.5/8.5	HONDA	A6600	80*100*10 R
HONDA	A4807	42*56.2*6	HONDA	A6612	38*50*7 L
HONDA	A4809	35*68*9/12.5 L	HONDA	A6617	80*98*10 L
HONDA	A4810	35*62*9/12	HONDA	A6623	30*42*7 R
HONDA	A4811	22*35*7	HONDA	NJ 072	35*50*8 L
HONDA	A4812	25*40*7	HONDA	NJ 073	74*98*12
HONDA	A4813	35*56*9/12	HONDA	NJ 074	45*93*5.8/7.8
HONDA	A4814	35*76*9/12.5 R	HONDA	NJ 075	45*64/70*9/14
HONDA	A4815	42*62*7	HONDA	NJ 077	42*60*7 R
HONDA	A4818	42*56.2*9.5	HONDA	NJ 161	35*56*8/11.5 L
HONDA	A4819	27*43*9 L	HONDA	NJ 165	35*62*8/11.5 R
HONDA	A4822	35*56*8/11.5 L	HONDA	NJ 254	27*43*9 L
HONDA	A4823	35*68*9/15.5	HONDA	NJ 309	76*98*12
HONDA	A4824	31*46*8 L	HONDA	NJ 311	35*54*8
HONDA	A4825	47*72.2*6/8	HONDA	NJ 312	80*100*10 R
HONDA	A4826	49*72.2*6/8	HONDA	NJ 381	32*46*8 L
HONDA	A4829	38*54*8/12 L	HONDA	NJ 464	45*72.2*7.5/8.5
HONDA	A4830	27*42*7	HONDA	NJ 527	42*62*7
HONDA	A4831	35*54*8	HONDA	NJ 675	80*98*10 L
HONDA	A4834	50*66*8/11	HONDA	NJ 731	35*62*9/12
HONDA	A4839	42*55*7	HONDA	NJ 732	38*54*8/12 L
HONDA	A4840	45*58*7	HONDA	NJ 733	35*68*9/15.5
HONDA	A4844	26*42*7 L	HONDA	NJ 734	47*64/68*6/14
HONDA	A4845	28*41*7	HONDA	NJ 777	35*76*9/12.5 R
HONDA	A4847	35*62*8/11.5 R	HONDA	NJ 778	22*35*7
HONDA	A4848	40*76*9/12.5 R	HONDA	NJ 779	27*42*7
HONDA	A4850	29*45*8 L	HONDA	NJ 780	49*64/71*6/13

SOG&H.T Automobile Oil Seal

BRAND	PART NO.	SIZE	BRAND	PART NO.	SIZE
HONDA	NJ 781	47*72.2*6/8	HINO	2380-1122-10	58*75*9
HONDA	NJ 782	49*72.2*6/8	HINO	2445-6623-00	101*114*10
HONDA	NJ 889	40*76*9/12.5 R	HINO	2445-6623-00	101*114*10
HONDA	NJ 915	35*56*9/12.5	HINO	2445-6624-00	101*114*10
HONDA	NJ 934	25*40*7	HINO	2445-6624-00	101*114*10
HONDA	NJ 983	42*56.2*9.5	HINO	2445-6804-00	120*140*12
HONDA	NK 022	35*68*9/12.5 L	HINO	2445-6804-00	120*140*12
HONDA	NK 102	65*88*12 R	HINO	2445-6804-10	120*140*12
HINO	1828-4001-00	40*50*6.5	HINO	2445-6804-20	120*140*12
HINO	1828-4002-00	40*50*6.5	HINO	9004D-10029	30*45*8
HINO	1828-4503-00	45*55*7.5	HINO	9004D-11053	70*112*14/20
HINO	1828-4503-00	45*55*7.5	HINO	9004D-11059	50*82*12 R
HINO	1828-4504-00	45*55*7.5	HINO	9004D-11076	95*110*11 L
HINO	1828-4504-00	45*55*7.5	HINO	9004D-11100	45*62*9
HINO	1828-5201-00	52*100*15	HINO	9004D-11101	50*72*12
HINO	1828-5206-00	52*100*15	HINO	9004D-11102-000	68*88*10
HINO	1828-5207-00	52*64*9	HINO	9004D-11112	45*62*9
HINO	1828-5208-00	52*64*9	HINO	9004D-12023	55*101*4.7
HINO	1828-5505-00	52*72*9	HINO	9031B-28004	28.6*43*6.5
HINO	1828-5510-00	55*72*9	HINO	9031B-32012	32*53*7 R
HINO	1828-6008-00	60*74*7.5	HINO	9031B-32106	32*48*8
HINO	1828-6008-00	60*74*7.5	HINO	9031B-45001	45*62*9
HINO	1828-6009-00	60*74*7.5	HINO	9031B-48011	48*62*9 L
HINO	1828-6301-00	63*100*12	HINO	9031B-50002	50*72*12 R
HINO	1828-6302-00	63*100*12	HINO	9031B-50007	50*72*12 R
HINO	1828-6302-00	63*100*12	HINO	9031B-95001	95*115*12 L
HINO	1828-6304-00	63*100*12	HINO	9031B-95003	95*115*12 L
HINO	1828-6508-00	65*95*14/22	HINO	9828-00102	100*120*13
HINO	1828-6509-00	65*95*14/22	HINO	9828-00105	100*120*13
HINO	1828-7511-00	75*100*13/18 R	HINO	9828-00106	140*160*14/17
HINO	1828-9003-00	90*110*13 L	HINO	9828-00107	100*120*13
HINO	2300-6839-00	52*62*9	HINO	9828-00109	100*120*13/18
HINO	2300-6851-20	140*160*14	HINO	9828-01102	125*155*14 L
HINO	2300-6851-30	140*160*14	HINO	9828-01103	135*165*14
HINO	2300-6851-40	140*160*14	HINO	9828-01104	120*140*12
HINO	2301-6637-00	138*152*12	HINO	9828-01106	140*160*14
HINO	2301-6867-30	146*170*18	HINO	9828-01107	146*170*18
HINO	2310-6649-00	84*100*10	HINO	9828-01109	135*165*14/20 L
HINO	2310-6850-10	116*132*11	HINO	9828-01110	146*170*18
HINO	2380-1122-00	58*75*9	HINO	9828-01112	138*152*12

SOG&H.T Automobile Oil Seal

BRAND	PART NO.	SIZE	BRAND	PART NO.	SIZE
HINO	9828–01120	140*160*14	HINO	9828–40105	40*50*6.5
HINO	9828–01125	138*152*12	HINO	9828–43102	43*63*9 R
HINO	9828–01127	160*182*18	HINO	9828–45103	45*55*7.5
HINO	9828–01128	146*170*18	HINO	9828–45104	45*55*7.5
HINO	9828–01130	146*170*18	HINO	9828–45105	40*50*6.5
HINO	9828–01131	146*170*18	HINO	9828–48102	48*60*9 R
HINO	9828–01134	140*160*12	HINO	9828–48112	48*108.5*13/14
HINO	9828–01135	125*155*14 L	HINO	9828–48120	48*60*9 R
HINO	9828–01136	116*132*11	HINO	9828–50105	50*68*9 R
HINO	9828–01137	101*114*10	HINO	9828–52105	146*170*18
HINO	9828–01144	106*126*12 L	HINO	9828–52106	52*100*15
HINO	9828–01147	101*114*10	HINO	9828–52111	52*100*15
HINO	9828–01148	120*140*12	HINO	9828–52112	52*70*9
HINO	9828–01149	120*140*12	HINO	9828–52115	52*64*9
HINO	9828–01165	138*152*12	HINO	9828–52116	52*64*9
HINO	9828–01167	106*126*12 L	HINO	9828–52117	52*62*9
HINO	9828–01168	135*165*14/20 L	HINO	9828–55101	52*72*9
HINO	9828–01172	116*132*11	HINO	9828–55105	52*72*9
HINO	9828–01173	125*155*14 L	HINO	9828–55110	55*72*9
HINO	9828–01177	140*160*14	HINO	9828–55112	55*72*9
HINO	9828–01178	140*160*14	HINO	9828–55113	55*72*9
HINO	9828–01184	120*140*12	HINO	9828–57102	57*124*13
HINO	9828–01193	154*175*13	HINO	9828–57103	57*124*13
HINO	9828–01195	154*175*13	HINO	9828–58104	58*75*9/14.5 R
HINO	9828–01199	135*165*14/20 L	HINO	9828–58105	58*75*9
HINO	9828–01203	127*147*11.5	HINO	9828–60108	60*74*7.5
HINO	9828–01204	145*164*14	HINO	9828–60109	60*74*7.5
HINO	9828–01206	106*123*11	HINO	9828–60115	60*74*7.5
HINO	9828–01207	138*152*12	HINO	9828–60119	60*75*9/15 L
HINO	9828–01218	100*135*17	HINO	9828–63102	63*100*12
HINO	9828–01223	116*151*17	HINO	9828–63104	63*100*12
HINO	9828–01228	100*135*17	HINO	9828–63108	63*78*9/15 L
HINO	9828–01229	138*152*12	HINO	9828–65107	65*95*14/22
HINO	9828–01232	127*147*11.5	HINO	9828–65108	65*95*14/22
HINO	9828–25106	25*45*10	HINO	9828–65109	65*95*14/22
HINO	9828–25108	25*45*8	HINO	9828–65111	65*95*14/22
HINO	9828–27101	27*47*10	HINO	9828–65112	65*80*10/17.5 L
HINO	9828–37103	37*50*6 R	HINO	9828–65116	65*88*12/19 R
HINO	9828–40101	40*50*6.5	HINO	9828–65119	65*88*12/19 R
HINO	9828–40102	40*50*6.5	HINO	9828–66105	66*134*16

SOG&H.T Automobile Oil Seal

BRAND	PART NO.	SIZE	BRAND	PART NO.	SIZE
HINO	9828–66106	66*134*16	HINO	H3023	90*110*13 L
HINO	9828–70101	70*95*14/20.5	HINO	H3028	140*160*14
HINO	9828–70102	70*95*13	HINO	H3030	138*152*12
HINO	9828–70105	70*95*13	HINO	H3034	146*170*18
HINO	9828–70110	70*95*12/20.5 R	HINO	H3038	84*100*10
HINO	9828–75111	75*100*13/18 R	HINO	H3039	116*132*12
HINO	9828–75117	75*100*13/18 R	HINO	H3040	125*155*14 L
HINO	9828–76101	76*164*14	HINO	H3042	101*114*10
HINO	9828–76102	76*157*8/19	HINO	H3043	120*140*12
HINO	9828–76104	76*164*14/12 W	HINO	H3044	58*75*9
HINO	9828–78101	78*100*14/20 L	HINO	H3058	154*175*13
HINO	9828–79102	79*114*17	HINO	H3059	76*164*14
HINO	9828–79103	79*114*17	HINO	H3066	106*126*12 L
HINO	9828–80102	80*105*13	HINO	H3073	55*72*9
HINO	9828–80105	80*105*13	HINO	H3074	70*95*13
HINO	9828–80110	80*136*10/26 R	HINO	H3075	75*100*13/18 R
HINO	9828–80111	80*124*10/26 R	HINO	H3076	135*165*14
HINO	9828–80114	80*136*9/25 W	HINO	H3077	65*88*12/19 R
HINO	9828–80120	80*105*13	HINO	H3078	57*124*13
HINO	9828–85106	84*100*10	HINO	H3079	127*147*11.5
HINO	9828–90103	90*110*13 L	HINO	H3082	66*134*16
HINO	9828–90104	90*115*12/19 R	HINO	H3083	145*164*14
HINO	9828–90108	90*110*13 L	HINO	H3085	135*165*14/20 L
HINO	9828–90110	90*125*10/17 W14	HINO	H3095	58*75*9/14.5 R
HINO	9828–90115	90*125*10/17 W14	HINO	H3096	100*120*13/18
HINO	9828–96101	96*124*14/20 R	HINO	H3097	43*63*9 R
HINO	9828–96103	96*124*14/20 R	HINO	H3098	48*60*9 R
HINO	9828–96105	96*124*14/20 R	HINO	H3099	60*75*9/15 L
HINO	9828–96109	96*131*17.5	HINO	H3100	80*136*10/26 R
HINO	H3003	40*50*6.5	HINO	H3101	80*124*10/26 R
HINO	H3004	45*55*7.5	HINO	NJ 298	65*88*12/19 R
HINO	H3005	52*70*9	HINO	NJ 300	80*105*13
HINO	H3007	52*100*15	HINO	NJ 301	96*124*14/20 R
HINO	H3010	55*72*9	HINO	NJ 302	100*120*13
HINO	H3012	60*74*7.5	HINO	NJ 303	106*126*12 L
HINO	H3013	63*100*12	HINO	NJ 305	125*155*14 L
HINO	H3017	65*95*14/22	HINO	NJ 391	138*152*12
HINO	H3018	70*95*14/20.5 L	HINO	NJ 421	60*74*7.5
HINO	H3021	75*100*13/18 R	HINO	NJ 422	146*170*18
HINO	H3022	80*105*13	HINO	NJ 457	140*160*14

SOG&H.T Automobile Oil Seal

BRAND	PART NO.	SIZE	BRAND	PART NO.	SIZE
HINO	NJ 459	45*55*7.5	HINO	SZ311-76002	76*164*14/12 W
HINO	NJ 460	52*64*9	HINO	SZ319-57001	57*124*13
HINO	NJ 461	55*72*9	HINO	SZ319-66001	66*134*16
HINO	NJ 462	63*100*12	GM	94846026	34*54*9/15.5
HINO	NJ 463	90*110*13 L	FORD	6 562 502	49*62.5*8/12.5
HINO	NJ 582	120*140*12	FORD	BP05-11-312	83*100*9 L
HINO	NJ 619	70*95*13	FORD	UH71-32-180	32*42*7.5/9
HINO	NJ 623	52*70*9	DAIHATSU	90043-10020-000	30*42*8
HINO	NJ 624	52*62*9	DAIHATSU	90043-10026-000	20*35*8
HINO	NJ 672	55*72*9/15 L	DAIHATSU	90043-10027-000	25*35*6
HINO	NJ 673	60*75*9/15 L	DAIHATSU	90043-10029-000	30*45*8
HINO	NJ 722	84*100*10	DAIHATSU	90043-10030-000	45*62*9
HINO	NJ 725	135*165*14/20 L	DAIHATSU	90043-10032-000	25*35*6
HINO	NJ 728	140*160*14/17	DAIHATSU	90043-10035-000	25*35*6
HINO	NJ 729	75*100*13/18 R	DAIHATSU	90043-10036-000	25*35*6
HINO	NJ 730	90*115*13/19	DAIHATSU	90043-10042-000	38*52*7
HINO	NJ 769	145*164*14	DAIHATSU	90043-10045-000	20*35*8
HINO	NJ 770	37*50*6 R	DAIHATSU	90043-10051-000	25*35*6
HINO	NJ 771	43*63*9 R	DAIHATSU	90043-11001-000	35*55*11
HINO	NJ 772	48*60*9 R	DAIHATSU	90043-11017-000	30*55*12 R
HINO	NJ 773	65*95*14/22	DAIHATSU	90043-11022-000	38*55*8
HINO	NJ 774	66*134*16	DAIHATSU	90043-11024-000	40*62*12
HINO	NJ 776	80*124*10/26 R	DAIHATSU	90043-11042-000	60*82*9 L
HINO	NJ 922	100*120*13/18	DAIHATSU	90043-11046-000	45*72*12 R
HINO	NJ 923	154*175*12	DAIHATSU	90043-11053-000	70*112*14/20
HINO	NJ 925	106*123*11	DAIHATSU	90043-11058-000	50*82*12 R
HINO	NJ 928	48*108.5*13/14	DAIHATSU	90043-11059-000	50*82*12 R
HINO	NJ 929	58*75*9/14.5 R	DAIHATSU	90043-11060-000	63*80*9
HINO	NJ 932	76*164*14	DAIHATSU	90043-11066-000	40*62*12
HINO	NJ 971	52*100*15	DAIHATSU	90043-11073-000	30*55*12 R
HINO	NK 020	127*147*11.5	DAIHATSU	90043-11074-000	30*55*12 R
HINO	NK 021	57*124*13	DAIHATSU	90043-11075-000	45*62*9
HINO	NK 070	140*160*12	DAIHATSU	90043-11076-000	95*110*11 L
HINO	SZ311-00002	100*120*13/18	DAIHATSU	90043-11077-000	50*82*12 R
HINO	SZ311-01003	138*152*12	DAIHATSU	90043-11079-000	52*75*12
HINO	SZ311-01033	145*164*14	DAIHATSU	90043-11080-000	55*78*12
HINO	SZ311-01046	138*152*12	DAIHATSU	90043-11081-000	32*48*8
HINO	SZ311-01047	154*175*13	DAIHATSU	90043-11082-000	50*72*9
HINO	SZ311-01048	101*114*10	DAIHATSU	90043-11086-000	32*52*8
HINO	SZ311-01049	127*147*11.5	DAIHATSU	90043-11092-000	35*55*11

SOG&H.T Automobile Oil Seal

BRAND	PART NO.	SIZE
DAIHATSU	90043-11093-000	30*55*12 R
DAIHATSU	90043-11095-000	58*74*10 L
DAIHATSU	90043-11098-000	30*41*10 L
DAIHATSU	90043-11100-000	45*62*9
DAIHATSU	90043-11101-000	50*72*12
DAIHATSU	90043-11102-000	68*88*10
DAIHATSU	90043-11105-000	35*68*9/15.5
DAIHATSU	90043-11106-000	40*64*16
DAIHATSU	90043-11109-000	32*48*7 R
DAIHATSU	90043-11111-000	45*63*7
DAIHATSU	90043-11112	45*62*9
DAIHATSU	90043-11112-000	45*62*9
DAIHATSU	90043-11134-000	44*63*13/13.5
DAIHATSU	90043-11134-000	44*63*13/13.5
DAIHATSU	90043-11141-000	30*45*8
DAIHATSU	90043-11144-000	34*48*7 R
DAIHATSU	90043-11147-000	45*68*12.5/19
DAIHATSU	90043-11148-000	45*80*10/16.5
DAIHATSU	90043-11149-000	28*42*8
DAIHATSU	90043-11150-000	45*63*7
DAIHATSU	90043-11153-000	35*68*9/15.5
DAIHATSU	90043-11166-000	50*62*9
DAIHATSU	90043-11176-000	70*92*12 L
DAIHATSU	90043-11184-000	35*68*9/15.5
DAIHATSU	90043-11188-000	44*63*7/9
DAIHATSU	90043-11188-000	44*63*7/9
DAIHATSU	90043-11198-000	30*55*12
DAIHATSU	90043-11201-000	44*63/72.5*26
DAIHATSU	90043-11201-000	44*63/72.5*26
DAIHATSU	90043-11202-000	44*63*7/9
DAIHATSU	90043-11202-000	44*63*7/9
DAIHATSU	90043-11206-000	40*52*7
DAIHATSU	90043-11210-000	38*52*7
DAIHATSU	90043-11211-000	34*48*7 R
DAIHATSU	90043-11222-000	58*74*10 L
DAIHATSU	90043-11224-000	38*55*8 R
DAIHATSU	90043-11227-000	45*68*12.5/19
DAIHATSU	90043-11229-000	38*50*8
DAIHATSU	90043-11230-000	80*100*8.5 L
DAIHATSU	90043-11247-000	38*55*8 R

BRAND	PART NO.	SIZE
DAIHATSU	90043-11260-000	39*68*9/15.5 RB
DAIHATSU	90043-11267-000	58*74*10 L
DAIHATSU	90043-11270-000	35*55*12/18
DAIHATSU	90043-11271-000	39*68*16/22.5 RM
DAIHATSU	90043-11283-000	58*74*10 L
DAIHATSU	90043-11284-000	32*46*6 R
DAIHATSU	90043-11287-000	55*78*12
DAIHATSU	90043-11288-000	38*62*12/18.5
DAIHATSU	90043-11291-000	40*56*8
DAIHATSU	90043-11292-000	73.5*89*8.5 L
DAIHATSU	90043-11323-000	58*74*10 L
DAIHATSU	90043-11364	73.5*89*8.5 L
DAIHATSU	90043-12023-000	55*101*4.7
DAIHATSU	90043-13012-000	45.5*54*6/9.5
DAIHATSU	90043-16005-000	45*62*11
DAIHATSU	90311-11032	57*124*13
DAIHATSU	90311-11076-000	95*110*11 L
DAIHATSU	90311-25003-000	25*38*7 R
DAIHATSU	90311-28003-000	28.6*43*6.5
DAIHATSU	90311-28004-000	28.6*43*6.5
DAIHATSU	90311-32010-000	32*52*11
DAIHATSU	90311-32012-000	32*53*7 R
DAIHATSU	90311-32074-000	32*52*11
DAIHATSU	90311-32106-000	32*48*8
DAIHATSU	90311-35003-000	35*49*6 R
DAIHATSU	90311-35013-000	35*49*6 R
DAIHATSU	90311-38013-000	38.5*58*11 R
DAIHATSU	90311-38015-000	38*65*12/19 R
DAIHATSU	90311-38022-000	38.5*58*8.5 R
DAIHATSU	90311-38024-000	38.5*58*11 R
DAIHATSU	90311-38057-000	38*65*12/19 R
DAIHATSU	90311-40108-000	40*52*7
DAIHATSU	90311-41123-000	41*53*7
DAIHATSU	90311-42055-000	42*55*7
DAIHATSU	90311-45001-000	45*62*9
DAIHATSU	90311-45002-000	45*68*12
DAIHATSU	90311-45018-000	45*62*9
DAIHATSU	90311-45069-000	45*68*12
DAIHATSU	90311-48011-000	48*62*9
DAIHATSU	90311-50002-000	50*72*12 R

SOG&H.T Automobile Oil Seal

BRAND	PART NO.	SIZE
DAIHATSU	90311–50007–000	50*72*12 R
DAIHATSU	90311–50013–000	50*72*12 R
DAIHATSU	90311–50049–000	50*72*12 R
DAIHATSU	90311–52059–000	52*65*9
DAIHATSU	90311–70001–000	70*92*12 L
DAIHATSU	90311–70004–000	70*92*8.5 L
DAIHATSU	90311–80001–000	80*100*12 L
DAIHATSU	90311–80068–000	80*100*12 L
DAIHATSU	90311–95001–000	95*115*12 L
DAIHATSU	90311–95003–000	95*115*12 L
DAIHATSU	90311–95005–000	95*115*12 L
DAIHATSU	90311–95008–000	95*115*9.5/12 L
DAIHATSU	90311–95091–000	95*115*12 L
DAIHATSU	D4700	70*112*14/20
DAIHATSU	D4708	68*88*10
DAIHATSU	D4710	45*63*7
DAIHATSU	D4711	40*64*16
DAIHATSU	D4712	20*35*8
DAIHATSU	D4713	30*45*8
DAIHATSU	D4714	45*62*9
DAIHATSU	D4715	63*80*9
DAIHATSU	D4717	50*72*12
DAIHATSU	D4719	40*62*12
DAIHATSU	D4724	50*72*9
DAIHATSU	D4725	35*55*11
DAIHATSU	D4727	38*55*8
DAIHATSU	D4728	50*82*12 R
DAIHATSU	D4729	55*101*4.7
DAIHATSU	D4730	32*52*8
DAIHATSU	D4731	55*78*12
DAIHATSU	D4732	32*48*8
DAIHATSU	D4733	32*48*7 R
DAIHATSU	D4734	58*74*10 L
DAIHATSU	D4735	95*110*11 L
DAIHATSU	D4736	45*68*12.5/19
DAIHATSU	D4737	45*80*10/16.5
DAIHATSU	D4738	58*74*10 L
DAIHATSU	D4739	44*60*7 R
DAIHATSU	D4740	34*48*7 R
DAIHATSU	D4741	34*48*7 R

BRAND	PART NO.	SIZE
DAIHATSU	D4746	38*50*8 R
DAIHATSU	D4750	58*74*10 L
DAIHATSU	D6201	30*42*8
DAIHATSU	D6204	30*55*12
DAIHATSU	D6207	35*68*9/15.5
DAIHATSU	D6208	44*63*13/13.5
DAIHATSU	D6211	38*52*7
DAIHATSU	D6215	45.5*54*5.5/9
DAIHATSU	D6223	32*46*6 R
DAIHATSU	D6224	39*68*9/15.5 RB
DAIHATSU	D6225	39*68*16/22.5 RM
DAIHATSU	D6237	40*56*8
DAIHATSU	NJ 269	58*74*10 L
DAIHATSU	NJ 385	70*112*14/20
DAIHATSU	NJ 667	35*68*9/15.5
DAIHATSU	NJ 668	55*101*4.7
DAEWOO	09283–40001	40*52/62*8.5/7
DAEWOO	25187787	35*54.9*14.8 W
DAEWOO	90182166	35*54.9*14.8 W
DAEWOO	90183572	32*50*8 R
DAEWOO	94535474	40*52/62*8.5/7
DAEWOO	96101490	26*42*8 R
DAEWOO	96264738	35*54.9*14.8 W
DAEWOO	96316761	46*62*8/14
DAEWOO	96316762	46*62*7
BENZ	659976247	55*75*8
BENZ	964105 14001	8.84*20.46*5.92/8.33
AUDI	357501641B	40*52/58*7.5/6.2 W
OTHER	09282–12010	13*25*7
OTHER	09282–15008	15*25*6
OTHER	09282–17005	16*32*6
OTHER	09283–30064	30*55*10
OTHER	09289–12003	13*26*10
OTHER	09289–17004	17*30*9
OTHER	09289–17006	16*30*6
OTHER	09289–22007	22*35*5
OTHER	20010–11211	15*25*7
OTHER	20010–21211	15*25*7
OTHER	22015–13120	20*35*7
OTHER	42579–AV600	43*55/59.5*5/8

SOG&H.T Automobile Oil Seal

BRAND	PART NO.	SIZE	BRAND	PART NO.	SIZE
OTHER	43232–EB000	40*72*6.5	OTHER	NB 807	55*70*8 L
OTHER	43232–EB70A	40*72*6.5	OTHER	NJ 010	80*100*13 R
OTHER	48137–Z9005	25*38*7/8	OTHER	NJ 013	38*74*11 R
OTHER	4EB–23145–01	41*53*8/10.5	OTHER	NJ 016	48*62*9/24
OTHER	676–45314–00	2.62MM min qty.	OTHER	NJ 019	44*65*11
OTHER	90136849	26*42*8 R	OTHER	NJ 028	38.5*58*11 R
OTHER	90310–T0008	57*70*7.5 W14	OTHER	NJ 029	45*68*12
OTHER	90311–42019	42*60*7 R	OTHER	NJ 031	80*100*13 L
OTHER	91254–KF0–003	40*54/59.8*5/10.5	OTHER	NJ 032	48*70*9 R
OTHER	93101–17054	17*30*6	OTHER	NJ 037	35*55*11
OTHER	93101–20048	20*30*6	OTHER	NJ 039	40*54*5.5
OTHER	93101–20138	20*30/33*5/6	OTHER	NJ 053	51*65*9
OTHER	93101–22M60	22*35.5*6	OTHER	NJ 054	38.5*58*11 R
OTHER	93101–23070	23*37*6 NK7CS	OTHER	NJ 059	38.5*58*11 R
OTHER	93101–23M00	23*36*13	OTHER	NJ 063	62*85*8/10
OTHER	93101–25M03	25*40*6	OTHER	NJ 097	95*115*12 L
OTHER	93101–30M33	30*42*6	OTHER	NJ 103	32*48*8
OTHER	93101–35M18	35*50*7	OTHER	NJ 105	42*55*9
OTHER	93102–17342	17*28*5.5	OTHER	NJ 108	41*56*7
OTHER	93102–20425	20*42*8 L	OTHER	NJ 114	38*55*9 R
OTHER	93102–22082	22*32*6	OTHER	NJ 121	35*50*12 L
OTHER	93102–36M24	36*46*6	OTHER	NJ 123	35*50*12 L
OTHER	93104–16M01	16*30*5	OTHER	NJ 229	120*140*13
OTHER	93104–18049	18*30*5	OTHER	NJ 235	70*92*12
OTHER	93104–20M02	20*32*5	OTHER	NJ 241	80*100*12 L
OTHER	93106–09014	9*19*5	OTHER	NJ 250	44*60*7 R
OTHER	93210–48MG8	47.3*2.62 min qty.	OTHER	NJ 253	72*96*9 L
OTHER	93210–57M00	56.75*3.53 min qty.	OTHER	NJ 256	30*46*8
OTHER	93210–57M09	57*3 min qty.	OTHER	NJ 271	34*48*7 R
OTHER	93210–69MG6	69.5*3 min qty.	OTHER	NJ 272	35*55*11
OTHER	93210–75M51	64.77*2.62 min qty.	OTHER	NJ 279	58*80*12
OTHER	93210–85M97	83*5.5 min qty.	OTHER	NJ 282	34*48*8 R
OTHER	999113 07750	45*62*10	OTHER	NJ 289	80*100*10 L
OTHER	NA 248	44*65*11	OTHER	NJ 290	45*68*12 R
OTHER	NB 274	80*100*12 L	OTHER	NJ 293	80*96*9 L
OTHER	NB 354	80*105*13 L	OTHER	NJ 295	58*75*9
OTHER	NB 365	48*70*12 R	OTHER	NJ 299	80*105*13
OTHER	NB 394	48*70*9 R	OTHER	NJ 313	29*45*8 L
OTHER	NB 484	55*82*10	OTHER	NJ 319	60*82*12
OTHER	NB 698	80*98*10 L	OTHER	NJ 320	100*135*15 L

SOG&H.T Automobile Oil Seal

BRAND	PART NO.	SIZE
OTHER	NJ 326	51*70*11 R
OTHER	NJ 327	102*125*13 L
OTHER	NJ 329	51*70*11 R
OTHER	NJ 332	35*50*8
OTHER	NJ 334	23*34*8 L
OTHER	NJ 335	32*47*8
OTHER	NJ 338	60*80*8 L
OTHER	NJ 340	30*46*8
OTHER	NJ 345	85*105*13 L
OTHER	NJ 348	35*49*6 R
OTHER	NJ 350	48*70*12 R
OTHER	NJ 352	70*92*12 L
OTHER	NJ 355	50*72*12 R
OTHER	NJ 359	42*60*7 R
OTHER	NJ 361	80*100*8.5 L
OTHER	NJ 362	45*68*12
OTHER	NJ 365	50*68*9
OTHER	NJ 370	80*100*10 L
OTHER	NJ 390	68*88*10
OTHER	NJ 401	80*100*10 R
OTHER	NJ 404	40*62*11
OTHER	NJ 406	35*49*6 R
OTHER	NJ 408	35*49*6 R
OTHER	NJ 409	35*54*8
OTHER	NJ 432	45*62*9
OTHER	NJ 435	38*74*11 R
OTHER	NJ 445	32*46*8 L
OTHER	NJ 447	40*52*6 R
OTHER	NJ 451	42*55*9 R
OTHER	NJ 456	45*62*9
OTHER	NJ 458	106*126*12 L
OTHER	NJ 478	100*135*15 L
OTHER	NJ 481	60*82*12
OTHER	NJ 482	40*55*9
OTHER	NJ 485	50*72*12
OTHER	NJ 487	75*121*13
OTHER	NJ 491	70*92*12
OTHER	NJ 501	58*80*12
OTHER	NJ 502	35*50*12 L
OTHER	NJ 504	58*75*9

BRAND	PART NO.	SIZE
OTHER	NJ 514	25*38*7
OTHER	NJ 524	48*82*12 R
OTHER	NJ 530	56*122*10.5
OTHER	NJ 542	50*66.5*13/15.9
OTHER	NJ 561	47.6*70.6*9
OTHER	NJ 576	35*55*11
OTHER	NJ 583	146*170*18
OTHER	NJ 633	36*52*10 L
OTHER	NJ 643	26*40*7
OTHER	NJ 652	96*113/146*16 L
OTHER	NJ 655	20*30*7
OTHER	NJ 671	52*62*9
OTHER	NJ 712	100*120/158*15 L
OTHER	NJ 909	60*75*86/12
OTHER	NJ 943	82*105*13 L
OTHER	NJ 984	75*108*10/19.5
OTHER	NK 043	38*50*8
OTHER	NK 072	15*32*7.5
OTHER	NK 133	12*22*7
OTHER	VALVULA RELE	15.88*31.34*8/11.5

軸修護套 Shaft Sleeve

Used for repairing the worn-out shaft in different applications on various industries.

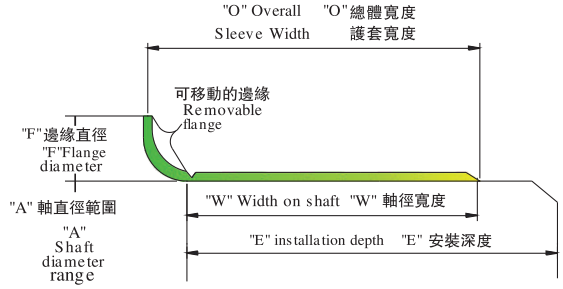

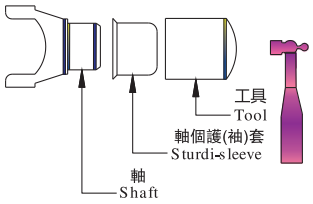

Reference number 文獻編號	Dimensions in Inches 英制尺寸						
	Nominal Shaft Diameter 參考軸徑	"A" Shaft Diameter Minimum 軸徑安裝下限	"A" Shaft Diameter Maximum 軸徑安裝上限	"W" Width on Shaft ±0.031" 軸套深度	"O" Overall Width ±0.031" 軸套含公裝深度	"F" Flange Diameter ±0.063" 公裝高度	"E" Installation Depth 安裝深度
99049	0.472	0.469	0.475	0.236	0.331	0.610	1.874
99050	0.500	0.498	0.502	0.248	0.343	0.610	2.000
99055	0.551	0.547	0.551	0.248	0.390	0.752	1.831
99056	0.563	0.560	0.566	0.248	0.390	0.752	1.862
99059	0.591	0.589	0.593	0.197	0.354	0.752	1.862
99062	0.625	0.623	0.627	0.315	0.406	0.752	2.000
99058	0.630	0.626	0.630	0.315	0.437	0.717	2.000
99068	0.669	0.667	0.671	0.315	0.433	0.874	2.000
99060	0.684	0.682	0.686	0.315	0.437	0.894	2.000
99082	0.706	0.704	0.709	0.315	0.433	0.961	1.811
99076	0.750	0.748	0.752	0.315	0.437	0.945	2.000
99081	0.760	0.759	0.761	0.315	0.437	0.937	2.000
99080	0.781	0.780	0.784	0.315	0.437	0.937	2.000
99078	0.787	0.785	0.789	0.315	0.433	0.929	2.000
99083	0.813	0.812	0.815	0.375	0.563	1.188	3.000
99086	0.859	0.857	0.861	0.248	0.374	1.154	2.000
99084	0.866	0.861	0.866	0.260	0.358	1.189	1.854
99085	0.866	0.861	0.866	0.315	0.472	1.189	1.811
99087	0.875	0.873	0.877	0.315	0.437	1.095	2.000
99091	0.910	0.908	0.912	0.315	0.437	1.217	1.847

Reference number 文獻編號	Dimensions in Inches 英制尺寸						
	Nominal Shaft Diameter 參考軸徑	"A" Shaft Diameter Minimum 軸徑安裝下限	"A" Shaft Diameter Maximum 軸徑安裝上限	"W" Width on Shaft ±0.031" 軸套深度	"O" Overall Width ±0.031" 軸套含公裝深度	"F" Flange Diameter ±0.063" 公裝高度	"E" Installation Depth 安裝深度
99092	0.945	0.940	0.945	0.315	0.437	1.130	2.000
99094	0.969	0.966	0.970	0.315	0.437	1.130	2.000
99096	0.969	0.966	0.970	0.626	0.721	1.130	2.000
99098	0.984	0.982	0.986	0.315	0.433	1.299	2.000
99101	1.000	0.995	1.002	0.312	0.437	1.221	2.032
99100	1.000	0.998	1.002	0.315	0.437	1.221	2.000
99103	1.024	1.019	1.024	0.315	0.472	1.315	1.811
99106	1.063	1.060	1.064	0.315	0.437	1.319	1.843
99108	1.089	1.087	1.091	0.315	0.437	1.406	0.626
99111	1.102	1.100	1.104	0.374	0.500	1.374	1.843
99112	1.125	1.123	1.127	0.315	0.437	1.500	0.689
99116	1.125	1.123	1.127	0.374	0.500	1.500	0.689
99120	1.156	1.154	1.158	0.374	0.500	1.350	0.689
99122	1.175	1.173	1.178	0.315	0.437	1.402	0.689
99114	1.181	1.179	1.184	0.315	0.433	1.402	0.689
99118	1.188	1.185	1.190	0.315	0.437	1.402	0.689
99123	1.219	1.216	1.222	0.315	0.433	1.563	0.626
99141	1.240	1.237	1.243	0.315	0.437	1.539	0.689
99125	1.252	1.247	1.253	0.315	0.437	1.500	0.689
99128	1.260	1.257	1.263	0.315	0.437	1.500	0.689
99121	1.299	1.297	1.301	0.591	0.709	1.594	0.813
99129	1.313	1.308	1.314	0.248	0.374	1.598	0.815
99131	1.313	1.310	1.316	0.500	0.626	1.595	0.815
99134	1.339	1.333	1.339	0.500	0.626	1.626	0.815
99133	1.375	1.371	1.377	0.315	0.437	1.638	0.815
99138	1.375	1.371	1.377	0.626	0.500	1.638	0.815
99139	1.375	1.375	1.381	0.512	0.630	1.638	0.815
99146	1.417	1.411	1.417	0.512	0.669	1.780	0.984
99143	1.438	1.432	1.438	0.563	0.689	1.780	1.016
99144	1.438	1.432	1.438	0.563	0.689	1.780	1.016
99147	1.496	1.490	1.496	0.512	0.669	1.780	0.984
99150	1.500	1.497	1.503	0.374	0.500	1.780	1.016
99149	1.500	1.497	1.503	0.563	0.689	1.780	1.016

Reference number 文獻編號	Dimensions in Inches 英制尺寸						
	Nominal Shaft Diameter 參考軸徑	"A" Shaft Diameter Minimum 軸徑安裝下限	"A" Shaft Diameter Maximum 軸徑安裝上限	"W" Width on Shaft ±0.031" 軸套深度	"O" Overall Width ±0.031" 軸套含公裝深度	"F" Flange Diameter ±0.063" 公裝高度	"E" Installation Depth 安裝深度
99152	1.523	1.520	1.526	0.437	0.563	1.858	1.016
99155	1.552	1.549	1.555	0.437	0.563	1.858	1.016
99156	1.563	1.559	1.565	0.563	0.689	1.858	1.016
99159	1.569	1.566	1.572	0.626	0.752	1.858	1.016
99153	1.575	1.569	1.575	0.390	0.508	1.847	1.000
99157	1.578	1.572	1.578	0.512	0.630	1.850	1.024
99160	1.605	1.602	1.608	0.500	0.642	1.937	1.000
99163	1.605	1.602	1.608	0.500	0.642	1.937	1.000
99161	1.625	1.622	1.628	0.315	0.437	1.874	1.016
99162	1.625	1.622	1.628	0.563	0.689	1.874	0.815
99166	1.650	1.647	1.654	0.445	0.571	2.087	0.843
99169	1.650	1.647	1.654	0.563	0.689	2.087	0.827
99165	1.656	1.653	1.659	0.551	0.689	2.087	0.827
99168	1.688	1.684	1.690	0.563	0.689	1.906	0.874
99167	1.688	1.685	1.691	0.315	0.437	1.906	0.874
99182	1.693	1.687	1.693	0.500	0.626	1.906	0.839
99171	1.719	1.715	1.721	0.563	0.689	2.032	0.815
99170	1.739	1.736	1.742	0.374	0.500	2.063	0.815
99173	1.750	1.745	1.753	0.874	1.000	2.063	1.031
99172	1.750	1.747	1.753	0.374	0.500	2.055	0.815
99180	1.750	1.747	1.753	0.532	0.626	2.063	0.878
99174	1.750	1.747	1.753	0.563	0.689	2.063	0.815
99175	1.750	1.747	1.753	0.752	0.874	2.063	0.815
99176	1.766	1.761	1.767	0.563	0.689	2.063	0.815
99177	1.772	1.769	1.775	0.551	0.669	2.087	0.811
99179	1.781	1.778	1.784	0.665	0.799	2.126	1.063
99181	1.813	1.809	1.815	0.563	0.689	2.091	1.000
99185	1.859	1.857	1.863	0.563	0.689	2.158	1.000
99186	1.868	1.866	1.872	0.890	1.024	2.189	1.000
99190	1.875	1.872	1.878	0.177	0.295	2.205	0.740
99188	1.875	1.872	1.878	0.295	0.413	2.205	0.740
99184	1.875	1.872	1.878	0.374	0.516	2.205	1.047
99187	1.875	1.872	1.878	0.563	0.689	2.205	1.000

Reference number 文獻編號	Dimensions in Inches 英制尺寸						
	Nominal Shaft Diameter 參考軸徑	"A" Shaft Diameter Minimum 軸徑安裝下限	"A" Shaft Diameter Maximum 軸徑安裝上限	"W" Width on Shaft ±0.031" 軸套深度	"O" Overall Width ±0.031" 軸套含公裝深度	"F" Flange Diameter ±0.063" 公裝高度	"E" Installation Depth 安裝深度
99189	1.891	1.887	1.893	0.551	0.669	2.205	0.984
99192	1.912	1.909	1.915	0.374	0.500	2.221	1.000
99193	1.938	1.934	1.940	0.563	0.689	2.221	1.000
99196	1.969	1.965	1.971	0.551	0.669	2.244	0.984
99198	1.980	1.977	1.983	0.563	0.705	2.315	1.047
99199	2.000	1.997	2.003	0.563	0.689	2.406	1.000
99200	2.000	1.997	2.003	0.874	1.000	2.406	1.000
99204	2.047	2.040	2.047	0.500	0.626	2.469	1.358
99205	2.063	2.057	2.063	0.780	0.937	2.469	1.374
99210	2.125	2.123	2.128	0.500	0.752	2.421	1.280
99212	2.125	2.124	2.130	0.780	0.937	2.421	1.374
99215	2.165	2.162	2.168	0.787	0.906	2.441	1.252
99218	2.188	2.186	2.192	0.780	0.937	2.500	1.315
99220	2.205	2.198	2.205	0.500	0.626	2.532	1.315
99224	2.205	2.197	2.205	0.779	0.936	2.531	3.150
99229	2.230	2.227	2.233	0.500	0.626	2.532	1.315
99230	2.230	2.227	2.233	0.780	0.906	2.532	1.252
99226	2.240	2.237	2.243	0.764	0.902	2.563	1.252
99227	2.250	2.249	2.255	0.315	0.437	2.532	1.315
99225	2.250	2.249	2.255	0.780	0.937	2.532	1.3
99219	2.284	2.280	2.286	0.781	0.938	2.598	1.375
99231	2.313	2.309	2.315	0.780	0.937	2.689	1.374
99233	2.328	2.327	2.333	0.752	0.874	2.748	1.500
99241	2.362	2.359	2.365	0.370	0.449	2.784	1.374
99235	2.362	2.359	2.365	0.787	0.906	2.784	1.469
99236	2.375	2.369	2.375	0.780	0.937	2.748	1.374
99238	2.375	2.372	2.378	0.595	0.752	2.748	1.374
99240	2.375	2.374	2.380	0.528	0.685	2.748	1.374
99237	2.375	2.374	2.380	0.780	0.937	2.748	1.374
99243	2.438	2.434	2.440	0.780	0.937	2.827	1.394
99242	2.438	2.435	2.441	0.500	0.626	2.827	1.421
99244	2.441	2.434	2.441	0.500	0.626	2.827	1.421
99249	2.492	2.489	2.495	0.780	0.937	2.874	1.394

Reference number 文獻編號	Dimensions in Inches 英制尺寸						
	Nominal Shaft Diameter 參考軸徑	"A" Shaft Diameter Minimum 軸徑安裝下限	"A" Shaft Diameter Maximum 軸徑安裝上限	"W" Width on Shaft ±0.031" 軸套深度	"O" Overall Width ±0.031" 軸套含公裝深度	"F" Flange Diameter ±0.063" 公裝高度	"E" Installation Depth 安裝深度
99253	2.500	2.497	2.503	0.555	0.650	2.819	0.890
99248	2.500	2.500	2.506	0.500	0.658	2.827	1.394
99250	2.500	2.500	2.506	0.780	0.937	2.819	1.374
99251	2.516	2.510	2.516	0.780	0.906	2.827	1.437
99254	2.559	2.556	2.562	0.787	0.906	2.850	1.374
99256	2.563	2.560	2.566	0.780	0.937	2.890	1.374
99259	2.598	2.595	2.601	0.780	0.937	2.992	1.252
99261	2.621	2.618	2.624	0.780	0.937	3.047	1.374
99264	2.625	2.621	2.627	0.780	0.906	3.047	1.374
99260	2.625	2.622	2.628	0.500	0.626	3.047	1.374
99262	2.625	2.625	2.631	0.780	0.937	3.047	1.374
99266	2.677	2.670	2.677	0.752	0.874	3.126	1.689
99268	2.730	2.727	2.733	0.780	0.906	3.126	1.315
99273	2.743	2.740	2.746	0.780	0.937	3.063	1.252
99274	2.750	2.745	2.751	0.780	0.937	3.126	1.252
99267	2.750	2.747	2.753	1.437	1.626	3.075	1.626
99270	2.750	2.747	2.753	0.780	0.937	3.126	1.252
99272	2.750	2.750	2.756	0.406	0.563	3.126	1.252
99275	2.750	2.750	2.756	0.780	0.937	3.126	1.252
99269	2.750	2.750	2.756	1.126	1.252	3.126	1.311
99276	2.756	2.753	2.759	0.787	0.945	3.126	1.252
99281	2.813	2.809	2.815	0.595	0.689	3.189	1.252
99284	2.835	2.828	2.835	0.752	0.874	3.224	1.343
99282	2.838	2.838	2.844	0.500	0.658	3.224	1.252
99286	2.869	2.866	2.872	0.780	0.937	3.189	1.252
99287	2.875	2.873	2.879	0.780	0.937	3.221	1.252
99290	2.938	2.937	2.943	0.500	0.642	3.343	1.331
99293	2.938	2.937	2.943	0.780	0.937	3.343	1.315
99289	2.953	2.950	2.956	0.866	1.024	3.307	1.315
99294	2.953	2.950	2.956	0.866	1.024	3.307	1.315
99292	2.974	2.972	2.976	0.811	1.000	3.236	1.252
99291	2.993	2.990	2.996	0.484	0.626	3.358	1.331
99298	2.993	2.990	2.996	0.563	0.689	3.358	1.374

Reference number 文獻編號	Dimensions in Inches 英制尺寸						
	Nominal Shaft Diameter 參考軸徑	"A" Shaft Diameter Minimum 軸徑安裝下限	"A" Shaft Diameter Maximum 軸徑安裝上限	"W" Width on Shaft ±0.031" 軸套深度	"O" Overall Width ±0.031" 軸套含公裝深度	"F" Flange Diameter ±0.063" 公裝高度	"E" Installation Depth 安裝深度
99299	2.993	2.990	2.996	0.811	1.000	3.350	1.280
99296	3.000	2.997	3.003	0.811	0.937	3.240	1.374
99303	3.000	3.000	3.006	0.626	0.811	3.347	1.280
99300	3.000	3.000	3.006	0.811	1.000	3.236	1.280
99301	3.011	3.008	3.014	0.500	0.626	3.354	2.000
99306	3.071	3.064	3.071	0.752	0.874	3.465	2.055
99311	3.125	3.120	3.126	0.689	0.811	3.532	2.000
99312	3.125	3.120	3.126	0.811	1.000	3.532	2.000
99307	3.125	3.124	3.132	0.551	0.709	3.524	2.032
99313	3.146	3.142	3.150	0.752	0.886	3.539	1.374
99317	3.150	3.146	3.153	0.433	0.591	3.543	1.374
99315	3.150	3.146	3.153	0.827	0.945	3.543	1.374
99328	3.228	3.225	3.231	0.661	0.847	3.587	1.752
99322	3.250	3.247	3.253	0.811	1.000	3.595	1.374
99324	3.250	3.250	3.256	0.595	0.721	3.575	1.374
99326	3.250	3.250	3.256	0.689	0.874	3.587	1.252
99325	3.250	3.250	3.256	0.811	1.000	3.587	1.374
99331	3.310	3.307	3.313	0.811	1.000	3.689	1.374
99332	3.342	3.337	3.347	0.669	0.827	3.701	1.378
99333	3.342	3.337	3.347	0.827	0.984	3.701	1.378
99334	3.347	3.338	3.347	0.398	0.500	3.579	1.429
99338	3.375	3.373	3.379	0.374	0.500	3.689	1.409
99337	3.375	3.373	3.379	0.811	1.000	3.693	1.374
99339	3.438	3.435	3.441	0.780	0.906	3.843	1.406
99340	3.480	3.477	3.483	0.780	0.906	3.835	1.406
99346	3.500	3.497	3.503	0.626	0.811	3.843	1.347
99348	3.500	3.498	3.506	0.311	0.500	3.843	1.346
99347	3.500	3.500	3.506	0.315	0.500	3.827	1.347
99350	3.500	3.500	3.506	0.811	1.000	3.843	1.347
99349	3.504	3.501	3.507	0.626	0.811	3.843	1.347
99352	3.543	3.540	3.546	0.437	0.539	4.000	1.811
99353	3.543	3.540	3.546	0.528	0.665	4.000	1.752
99351	3.543	3.540	3.546	0.709	0.906	4.000	1.811

Reference number 文獻編號	Dimensions in Inches 英制尺寸						
	Nominal Shaft Diameter 參考軸徑	"A" Shaft Diameter Minimum 軸徑安裝下限	"A" Shaft Diameter Maximum 軸徑安裝上限	"W" Width on Shaft ±0.031" 軸套深度	"O" Overall Width ±0.031" 軸套含公裝深度	"F" Flange Diameter ±0.063" 公裝高度	"E" Installation Depth 安裝深度
99354	3.543	3.540	3.546	0.906	1.102	4.000	1.752
99356	3.563	3.560	3.566	0.811	1.000	3.902	1.752
99360	3.621	3.618	3.624	0.811	1.000	4.032	1.752
99362	3.625	3.623	3.629	0.811	1.000	4.032	1.752
99363	3.626	3.623	3.629	0.500	0.625	4.025	1.750
99368	3.688	3.684	3.690	0.315	0.437	4.032	0.874
99365	3.688	3.685	3.691	0.811	0.937	4.024	1.799
99359	3.730	3.727	3.733	0.469	0.595	4.032	1.799
99366	3.730	3.727	3.733	0.780	0.906	4.024	1.799
99369	3.740	3.737	3.743	0.827	0.945	4.024	1.799
99374	3.740	3.740	3.746	0.343	0.500	4.032	1.799
99364	3.740	3.740	3.746	0.469	0.595	4.035	1.799
99376	3.750	3.746	3.752	0.563	0.689	4.024	1.799
99367	3.750	3.750	3.756	0.343	0.500	4.024	1.799
99372	3.750	3.750	3.756	0.689	0.874	4.020	1.799
99386	3.871	3.868	3.874	0.813	1.000	4.185	1.875
99387	3.875	3.873	3.875	0.811	1.000	4.221	1.874
99393	3.937	3.935	3.941	0.811	1.000	4.311	2.047
99401	4.000	3.998	4.006	0.500	0.626	4.374	2.067
99395	4.000	3.998	4.006	0.598	0.724	4.374	2.047
99400	4.000	3.998	4.006	0.650	0.776	4.374	1.374
99399	4.000	3.998	4.006	0.811	1.000	4.374	2.047
99409	4.095	4.090	4.098	0.787	0.945	4.437	1.417
99412	4.125	4.122	4.130	0.811	1.000	4.469	1.374
99413	4.134	4.130	4.138	0.787	0.913	4.469	1.378
99418	4.188	4.183	4.191	0.811	1.000	4.500	1.374
99423	4.234	4.226	4.234	0.780	0.906	4.610	1.437
99424	4.250	4.248	4.256	0.811	1.000	4.610	1.437
99435	4.328	4.327	4.335	0.508	0.650	4.921	1.260
99434	4.331	4.322	4.331	0.449	0.591	4.921	1.295
99437	4.375	4.370	4.378	0.811	1.000	4.752	1.654
99438	4.406	4.402	4.409	0.752	0.886	4.752	1.299
99439	4.438	4.434	4.442	1.000	1.142	4.811	1.315

Reference number 文獻編號	Dimensions in Inches 英制尺寸						
	Nominal Shaft Diameter 參考軸徑	"A" Shaft Diameter Minimum 軸徑安裝下限	"A" Shaft Diameter Maximum 軸徑安裝上限	"W" Width on Shaft ±0.031" 軸套深度	"O" Overall Width ±0.031" 軸套含公裝深度	"F" Flange Diameter ±0.063" 公裝高度	"E" Installation Depth 安裝深度
99450	4.500	4.496	4.504	0.811	1.000	4.902	1.260
99452	4.528	4.523	4.531	0.811	0.937	5.000	1.260
99465	4.626	4.621	4.629	0.437	0.626	5.000	1.374
99463	4.626	4.621	4.629	1.000	1.252	5.063	1.374
99468	4.688	4.685	4.693	0.811	1.000	5.063	1.374
99471	4.724	4.720	4.728	0.315	0.433	5.110	1.323
99473	4.724	4.720	4.728	0.787	0.984	5.110	1.260
99475	4.750	4.746	4.754	0.500	0.752	5.000	1.500
99472	4.803	4.799	4.807	0.787	0.945	5.177	1.260
99484	4.843	4.839	4.847	0.787	0.984	5.228	1.244
99487	4.875	4.871	4.879	0.626	0.752	5.248	1.43
99490	4.921	4.917	4.925	0.394	0.551	5.402	1.437
99492	4.921	4.917	4.925	1.024	1.260	5.402	1.437
99438	4.406	4.402	4.409	0.752	0.886	4.752	1.299
99501	5.000	4.998	5.006	0.539	0.681	5.402	1.437
99498	5.000	4.998	5.006	0.689	0.874	5.402	1.437
99499	5.000	4.998	5.006	0.811	1.000	5.390	1.437
99494	5.114	5.110	5.118	0.752	0.937	5.492	1.181
99491	5.125	5.117	5.125	0.866	0.996	5.492	1.280
99513	5.125	5.120	5.128	0.811	1.000	5.500	1.252
99525	5.250	5.246	5.254	0.811	1.000	5.559	1.252
99533	5.313	5.307	5.315	0.807	1.000	5.736	1.252
99537	5.375	5.371	5.379	0.811	1.000	5.874	1.252
99548	5.438	5.434	5.442	1.500	1.965	5.752	1.874
99547	5.476	5.472	5.480	0.563	0.752	5.902	1.232
99550	5.500	5.498	5.506	0.520	0.705	5.937	1.252
99549	5.500	5.498	5.506	0.811	1.000	5.937	1.252
99552	5.512	5.508	5.516	0.807	1.000	5.945	1.252
99560	5.625	5.621	5.629	0.875	1.000	6.188	1.812
99571	5.709	5.699	5.709	0.752	0.874	6.098	1.811
99562	5.734	5.726	5.734	0.563	0.752	6.098	1.937
99575	5.750	5.746	5.754	0.811	1.000	6.181	1.752
99587	5.875	5.871	5.879	1.000	1.252	6.189	1.315

Reference number 文獻編號	Dimensions in Inches 英制尺寸						
	Nominal Shaft Diameter 參考軸徑	"A" Shaft Diameter Minimum 軸徑安裝下限	"A" Shaft Diameter Maximum 軸徑安裝上限	"W" Width on Shaft ±0.031" 軸套深度	"O" Overall Width ±0.031" 軸套含公裝深度	"F" Flange Diameter ±0.063" 公裝高度	"E" Installation Depth 安裝深度
99595	5.906	5.896	5.906	1.024	1.181	6.260	1.280
99596	5.938	5.934	5.942	1.000	1.126	6.374	1.874
99601	6.000	5.995	6.003	0.500	0.752	6.358	1.752
99599	6.000	5.995	6.003	1.000	1.252	6.374	1.752
99605	6.063	6.058	6.068	1.024	1.181	6.374	1.299
99606	6.097	6.093	6.102	1.024	1.181	6.575	1.299
99620	6.203	6.198	6.208	0.811	1.063	6.626	1.752
99625	6.250	6.245	6.255	1.032	1.252	6.626	1.752
99630	6.299	6.289	6.299	1.000	1.252	6.748	1.378
99650	6.500	6.495	6.505	1.000	1.252	7.000	1.378
99640	6.688	6.683	6.693	1.252	1.496	7.189	1.752
99675	6.750	6.745	6.755	0.811	1.063	7.126	1.752
99687	6.890	6.880	6.890	1.102	1.260	7.362	1.378
99700	7.000	6.995	7.005	1.000	1.252	7.476	1.685
99721	7.087	7.077	7.087	1.299	1.496	7.500	1.752
99725	7.250	7.244	7.254	1.252	1.500	7.760	2.173
99726	7.278	7.273	7.284	1.260	1.496	7.760	2.173
99745	7.453	7.444	7.454	0.811	1.000	7.858	1.252
99750	7.500	7.495	7.505	0.811	1.000	7.874	1.252
99775	7.750	7.745	7.755	1.000	1.315	8.272	1.874
99787	7.875	7.869	7.879	1.358	1.500	8.374	1.752
99799	7.938	7.933	7.943	1.000	1.252	8.374	1.752
99800	8.000	7.995	8.005	1.000	1.252	8.374	1.752